The Data Link Layer

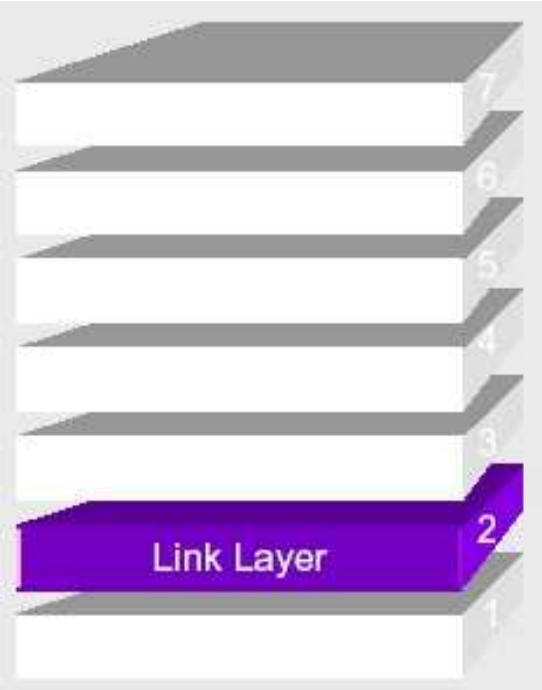

The Data Link Layer

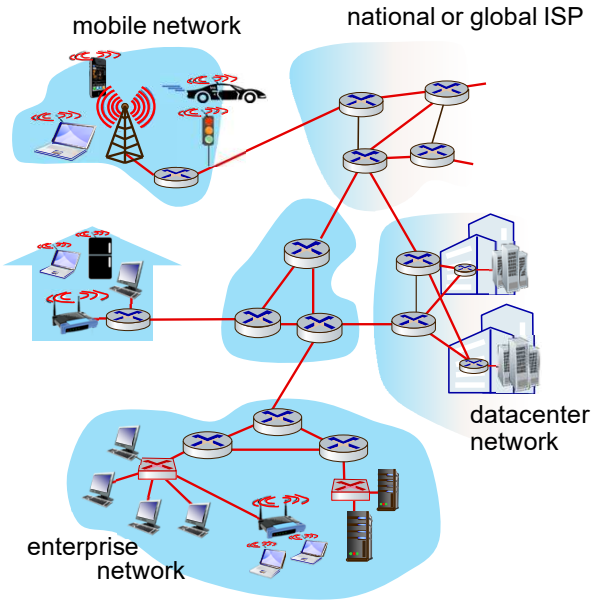

The Data Link Layer

The Data Link Level is responsible for providing a bitstream transmission service for the Network layer.

The main tasks of the DDL are:

- group symbols/bits from the physical layer to form frames (data framing);
- manage access to the physical medium, in the case of broadcast links (MAC sublayer);
- provide reliable delivery (if required);
- handle errors due to the transmission channel (detects or corrects);
- regulate the data flow between source and destination.

Transportation analogy

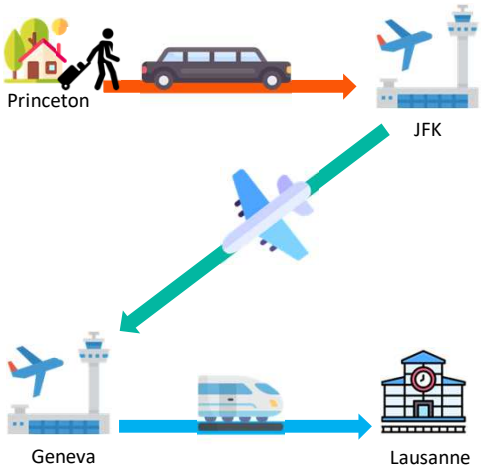

transportation analogy:

- trip from Princeton to Lausanne
  - limo: Princeton to JFK
  - plane: JFK to Geneva
  - train: Geneva to Lausanne
- tourist = datagram
- transport segment = communication link
- transportation mode = link-layer protocol
- travel agent = routing algorithm

Link layer: services

- framing, link access:
  - encapsulate datagram into frame, adding header, trailer
  - channel access if shared medium
  - "MAC" addresses in frame headers identify source, destination (different from IP address!)
- reliable delivery between adjacent nodes
  - we already know how to do this!
  - seldom used on low bit-error links
  - wireless links: high error rates
    - *Q:* why both link-level and end-end reliability?

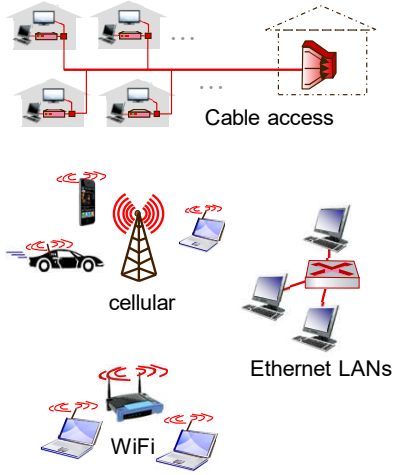

Link layer: services (more)

- flow control:
  - pacing between adjacent sending and receiving nodes
- error detection:
  - errors caused by signal attenuation, noise.
  - receiver detects errors, signals retransmission, or drops frame
- error correction:
  - receiver identifies *and corrects* bit error(s) without retransmission
- half-duplex and full-duplex:
  - with half duplex, nodes at both ends of link can transmit, but not at same time

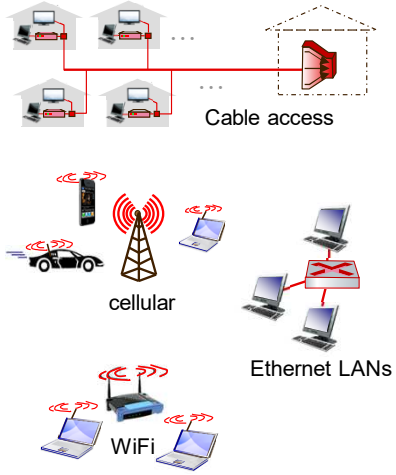

Host link-layer implementation

- in each-and-every host
- link layer implemented on-chip or in network interface card (NIC)
  - implements link, physical layer
- attaches into host's system buses
- combination of hardware, software, firmware.

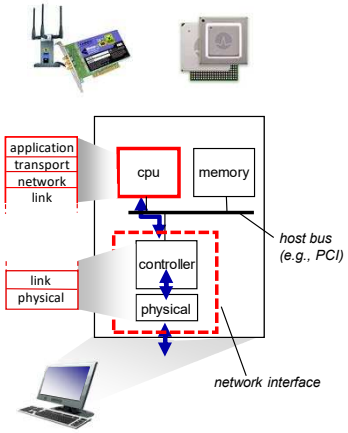

Interfaces communicating

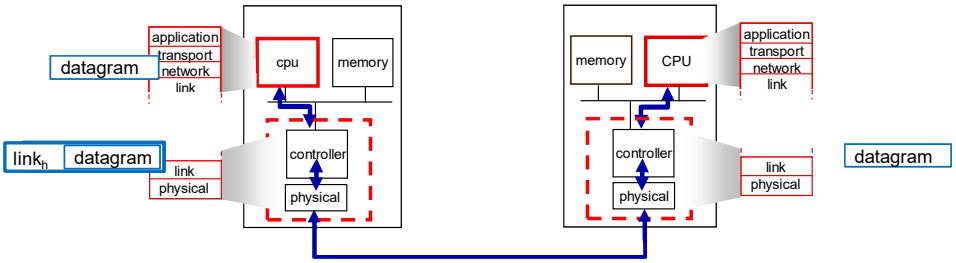

sending side:

- encapsulates datagram in frame
- adds error checking bits, reliable data transfer, flow control, etc.

receiving side:

- looks for errors, reliable data transfer, flow control, etc.
- extracts datagram, passes to upper layer at receiving side

Data framing

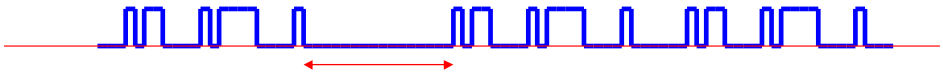

Two-layer encoding (e.g. light transmission)

The highlighted stroke is a sequence of "0"s or an absence of communication?

Data framing

Three-level encoding

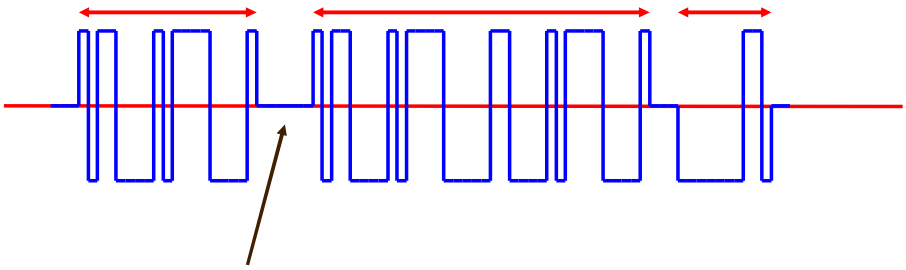

Redundancy?

Data framing

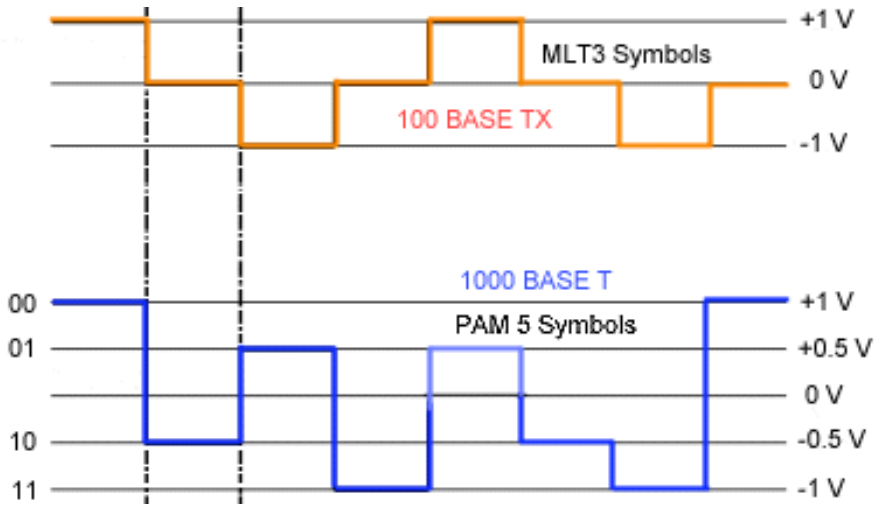

Data framing- 4B5B encoding

Nome	4B	5B	Descrizione
0	0000	11110	hex data 0
1	0001	01001	hex data 1
2	0010	10100	hex data 2
3	0011	10101	hex data 3
4	0100	01010	hex data 4
5	0101	01011	hex data 5
6	0110	01110	hex data 6
7	0111	01111	hex data 7
8	1000	10010	hex data 8
9	1001	10011	hex data 9
A	1010	10110	hex data A
B	1011	10111	hex data B
C	1100	11010	hex data C
D	1101	11011	hex data D
E	1110	11100	hex data E
F	1111	11101	hex data F
I	-NONE-	11111	Idle
J	-NONE-	11000	SSD #1
K	-NONE-	10001	SSD #2
T	-NONE-	01101	ESD #1
R	-NONE-	00111	ESD #2
H	-NONE-	00100	Halt

8B10B encoding

It is used to transmit 8 bits of data with 10 bits of signal.

It is electrically neutral: bit 1 is associated with a positive level, bit zero is associated with a negative level. The goal is to have a number of bits 1 on the channel equal to the number of bits 0.

It is used in various standards:

- PCI Express (< 3.0)
- IEEE 1394b (Firewire)
- Serial ATA
- Fibre Channel
- Gigabit Ethernet (alcune versioni)
- DisplayPort Main Link
- DVI e HDMI (Transition Minimized Differential Signaling)
- USB 3.0

8B10B encoding

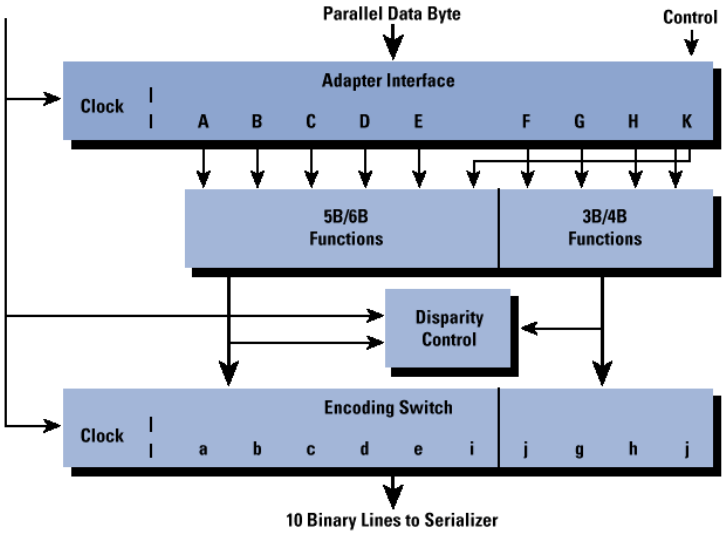

Amount of information

A step has three possible values H, M, L

With 2 consecutive steps we have 3^2 possible combinations:

HH, HM, HL, MH, MM, ML, LH, LM, LL

In this case we have a symbols composed by two consecutive steps, i.e. 9 possibilities.

With 3 steps -> 27 (3^3)

With 4 steps -> 81 (3^4)

Amount of information

Steps	Combinations	bits	Usable combinations
1	3	1	$2^1 = 2$
2	9	3	$2^3 = 8$
3	27	4	$2^4 = 16$
4	81	6	$2^6 = 64$
5	243	7	$2^7 = 128$
6	729	9	$2^9 = 512$

Amount of information

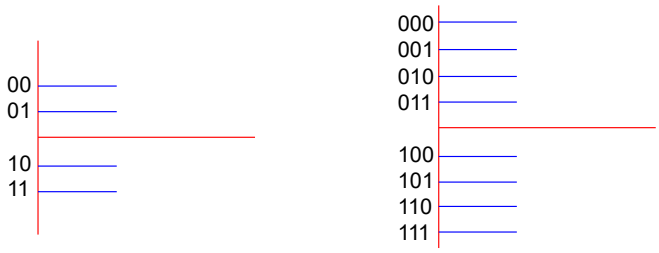

Each symbol carries a certain amount of information, measurable in bits.

A 4-level system allows 2 bits to be associated with each level.
With 8 levels we can have 3 bits/symbol, with 16 -> 4 bits, with 32 -> 5 bits...

Therefore, for each symbol, the information carried is $x=\log_2$ n° levels

Amount of information

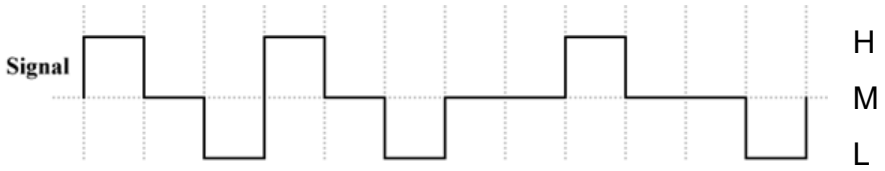

Each symbol carries a certain amount of information, measured in bits

1 symbol has x bits: $x = \log_2 3$ $(2^x=3)$

$x=\log_2 3$ $x= 1,5849\ldots$ $(x= \ln(3)/\ln(2))$

Amount of information

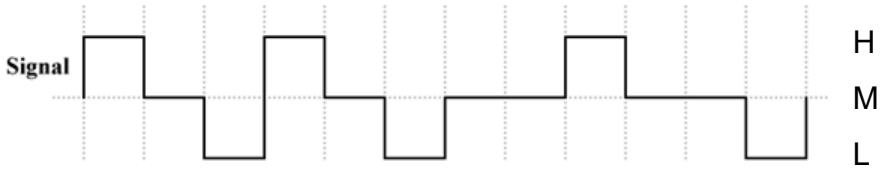

steps	Combinations	Information (bits)	Usable bits	Usable combinations
1	3	1,584963	1	2
2	9	3,169925	3	8
3	27	4,754888	4	16
4	81	6,33985	6	64
5	243	7,924813	7	128
6	729	9,509775	9	512
7	2187	11,09474	11	2048
8	6561	12,6797	12	4096
9	19683	14,26466	14	16384
10	59049	15,84963	15	32768

bitrate

Let's say you have a transmission, at a fixed speed, with 12 sps (steps per second)

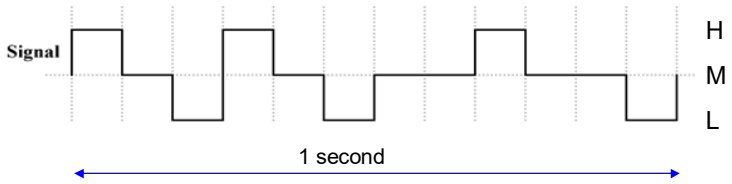

Steps per symbol	Combinations per symbol	Usable combinations	Bits per symbol	bps
1	3	2	1	12 x 1 = 12 bps
2	9	8	3	6 x 3 = 18 bps
3	27	16	4	4 x 4 = 16 bps
4	81	64	6	3 x 6 = 18 bps
6	729	512	9	2 x 9 = 18 bps
12	531441	524288	19	1 x 19 = 19 bps

Theoretical limit: $12 \times \log_2(3) = 19{,}01955001$

Error detection and error correction

Error detection detects a transmission error in a frame, but it does NOT correct it.

The correction allows you to detect and correct (with some strong limitations) errors due to transmission.

Both methods are based on the presence of redundancy in communication.

Redundancy

Example:

Mario Rossi
Born in Catania
May 15, 2000

CF : RSS MRA 00E15 C351 S

The CF contains redundant information.

The final letter of the CF is calculated as a function of the preceding characters -> redundancy

Error detection

EDC: error detection and correction bits (e.g., redundancy)

D: data protected by error checking, may include header fields

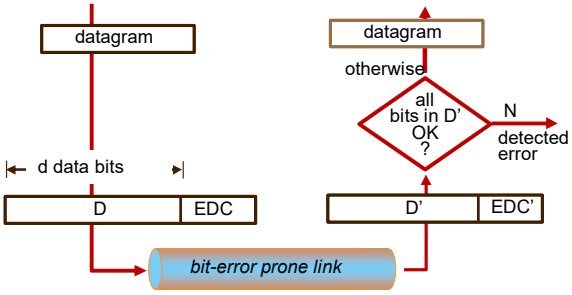

Error detection not 100% reliable!

- protocol may miss some errors, but rarely
- larger EDC field yields better detection and correction

Parity Check

Example: "even parity on bit 1".

The total number of "1" bits must be even.

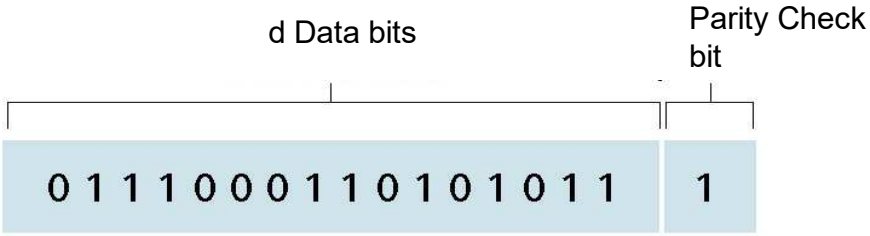

At receiver:

- compute parity of *d* received bits
- compare with received parity bit
  - if different than error detected

RAM parity

KEYSTRON
Memory Solutions
MK2DS168F-60
16x8 non-Parity Dram
16MB 30pin FPM SIMM
VOID IF REMOVED
105257 A
U1
U2
C2
P1

MemoryMasters
4MB PARITY SIMM 30PIN
WARRANTY VOID IF REMOVED

Parity checking

Can detect *and* correct errors (without retransmission!)

- two-dimensional parity: detect *and correct* single bit errors

single bit parity:

- detect single bit errors

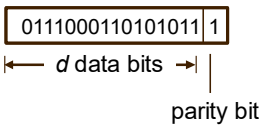

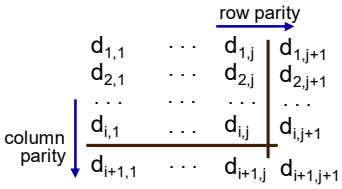

Cyclic Redundancy Check - CRC

D: Data bits	R: CRC bits

The sequence of d bits is represented by a polynomial of degree d-1, with binary coefficients, such that its coefficients are equal to the values of the bits of the sequence (data).

The leftmost bit represents the coefficient of the term d-1, while the rightmost bit represents the Known Term (grade 0)

Example:

D: **10010111**

$x^7 + \quad x^4 + \quad x^2 + x^1 + 1$

CRC

$0 + 0 = 0$	$0 \cdot 0 = 0$
$0 + 1 = 1$	$0 \cdot 1 = 0$
$1 + 0 = 1$	$1 \cdot 0 = 0$
$1 + 1 = 0$	$1 \cdot 1 = 1$

CRC

1 0 0 1 0 1 1 1

$x^7 + x^4 + x^2 + x + 1$

0 1 0 1 1 0 1 1

$x^6 + x^4 + x^3 + x + 1$

The sum is:

$x^7 + x^6 + x^3 + x^2$

1 1 0 0 1 1 0 0

The product is:

$x^{13} + x^{11} + x^8 + x^7 + x^5 + x^4 + 1$

1 0 1 0 0 1 1 0 1 1 0 0 0 1

CRC

M(x) polynomial with data

G(x) grade r generator polynomial.

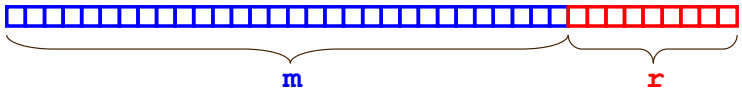

$$R(x) = x^r M(x) \bmod G(x)$$

CRC

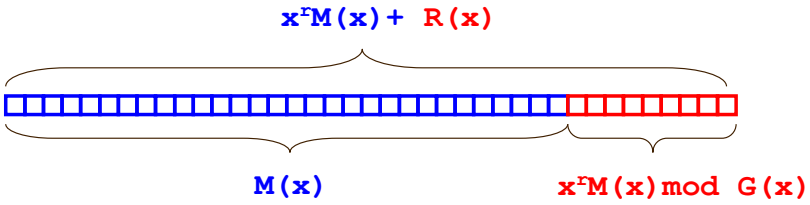

$$(x^r M(x) + R(x)) \bmod G(x) = 0$$

CRC

```
                                  G
1 0 1 1 1 0 0 0 0 | 1 0 0 1
1 0 0 1
    1 0 1 0
    1 0 0 1
        1 1 0 0
        1 0 0 1
          1 0 1 0
          1 0 0 1
            0 1 1
            R
```

`101110011` can be exactly divided by `1001`

CRC

```
11010110111110
10011
 10011110111110
  10011
   00001110111110
    00000
    00010111110
     00000
     00101111110
      00000
      01011111110
       00000
       10111110
        10011
...
```

CRC efficiency

Error Detection Capabilities

1. Single-Bit Errors: CRC can detect all single-bit errors. This is because changing a single bit alters the polynomial significantly, resulting in a different remainder when divided by the generator polynomial.
2. Double-Bit Errors: CRC can detect all double-bit errors, provided the distance between the bits is less than the length of the CRC. For example, a CRC with a length of 16 bits can detect any double-bit error within a span of 16 bits.
3. Odd Number of Errors: CRC can detect any odd number of bit errors, since the polynomial division by a typical generator polynomial (which includes the term x^0 will yield a different remainder for odd numbers of errors.
4. Burst Errors: CRC is particularly effective at detecting burst errors (where a sequence of bits is corrupted). The length of the burst error that can be detected depends on the length of the CRC. For instance, a CRC with a length of n bits can detect burst errors up to n bits in length.

CRC efficiency

Efficiency Metrics

1. Probability of Undetected Errors: The probability of an undetected error using CRC is very low. For a **n-bit** CRC, the probability of undetected errors is approximately 2^{-n}. For example, a 32-bit CRC has a probability of 2^{-32}, which is about 10^{-10}, meaning only one undetected error in every 10 billion errors.
2. Error Detection Coverage: CRC provides near 100% coverage for detecting errors within its designed parameters. It's especially strong in detecting common types of errors, such as single-bit errors and short burst errors, which are more likely to occur in practical applications.
3. Limitations: While CRC is highly efficient, it is not foolproof. It may not detect some specific types of errors, such as those that produce the same remainder when divided by the generator polynomial. However, these types of errors are statistically very rare.

CRC

Standardized polynomials:

CRC-12	$x^{12}+ x^{11}+ x^{3}+ x^{2}+ x+ 1$
CRC-16	$x^{16}+ x^{15}+ x^{2}+ 1$
CRC-CCITT	$x^{16}+ x^{12}+ x^{5}+ 1$
CRC-32	100000100110000010001110110110111

Hamming distance

Given two codewords, you can define a distance between them by counting the number of bits that are different from each other.

```
10001100
11000100
01001000     d = 2
```

A vocabulary is a set of codewords.

A vocabulary is complete if contains 2^n codewords, where n is the number of bits of each individual codeword.

Error correction

Consider the following vocabulary, with only 4 codewords:

```
000000
000111
111000
111111
```

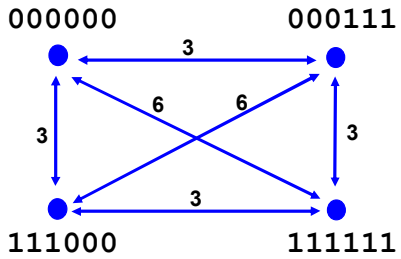

The distance in this vocabulary is 3.

Error correction

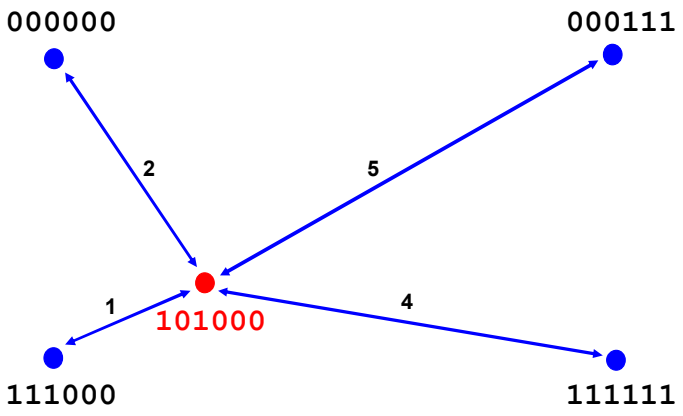

P(e=1) >> P(e=2) >> P(e=3) …

Error correction

In a vocabulary with distance $d=3$, individual errors can be corrected.

To correct e errors, we need a vocabulary with distance $d=2e+1$

To detect e errors we need a vocabulary with distance $d=e+1$

The correction is made on a probabilistic basis only.

Error correction

Example: vocabulary with 10-bit codewords

0000000000
0000011111
1111100000
1111111111

Valid codewords:	4
Invalid codewords:	1020
Hamming distance:	5
Error correction:	2 bits
Error detection:	4 bits

Is there another vocabulary with the same distance, but with more codewords?

Error correction

10 bits Codewords

Possible combinations: $2^{10} = 1024$

```
A 0000000000 :
B 0000011111 :
C 0011100011 :
D 0011111100 :
E 1100100101 :
F 1100111010 :
G 1111000110 :
H 1111011001 :
```

	A	B	C	D	E	F	G	H
A	0	5	5	6	5	6	6	7
B	5	0	6	5	6	5	7	6
C	5	6	0	5	6	7	5	6
D	6	5	5	0	7	6	6	5
E	5	6	6	7	0	5	5	6
F	6	5	7	6	5	0	6	5
G	6	7	5	6	5	6	0	5
H	7	6	6	5	6	5	5	0

Valid codewords: 8

Hamming distance: 5

Data bits: 3

Control bits: 7

Can we do better?

Error correction

Questions:

1. How much redundancy do we need?
   - Given m bits of data, how many bits of redundancy r do we need?

2. How to build a vocabulary to correct single errors?
   - Starting from m bits of data, knowing how to calculate r, how to operationally construct the vocabulary?

Redundancy

Consider a vocabulary with **m** data bits and **r** control bits

Let's say: **m+r = n**

All the possible combinations (with n bits) are 2^n , of which only 2^m are valid.

Let's consider a valid codeword: **10001**

Changing only one bit at a time, we can write other **n** codeword, all invalid:

n+1

- 10001
- 00001
- 11001
- 10101
- 10011
- 10000

n invalid codeword at distance 1

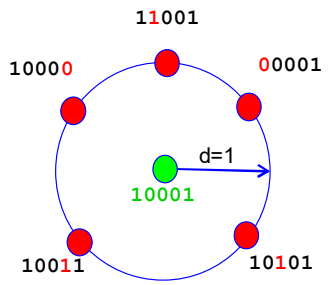

Redundancy

We have 2^n codeword, of which only 2^m are valid.

$(n = m + r)$

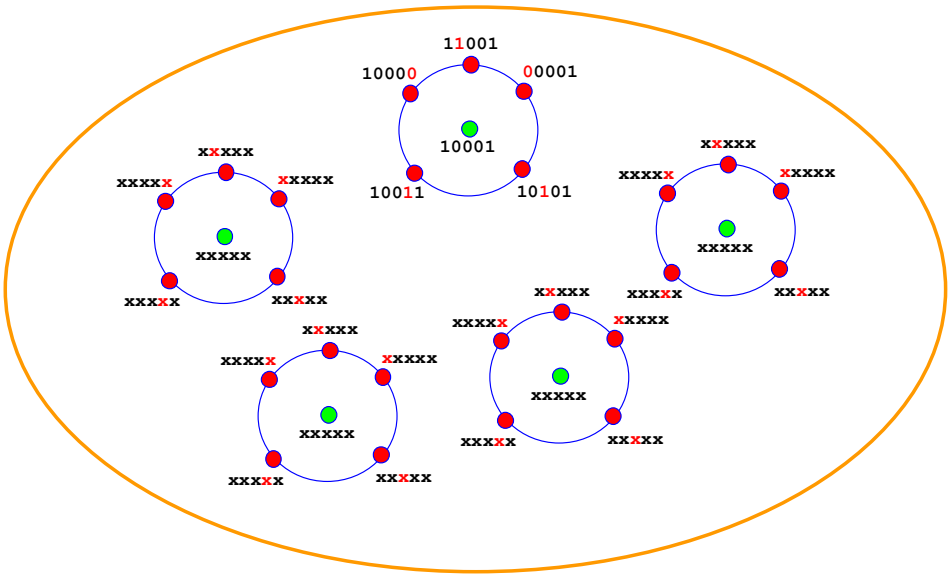

Redundancy

We know that, in order to correct 1 bit error, we need a vocabulary with **d=3**

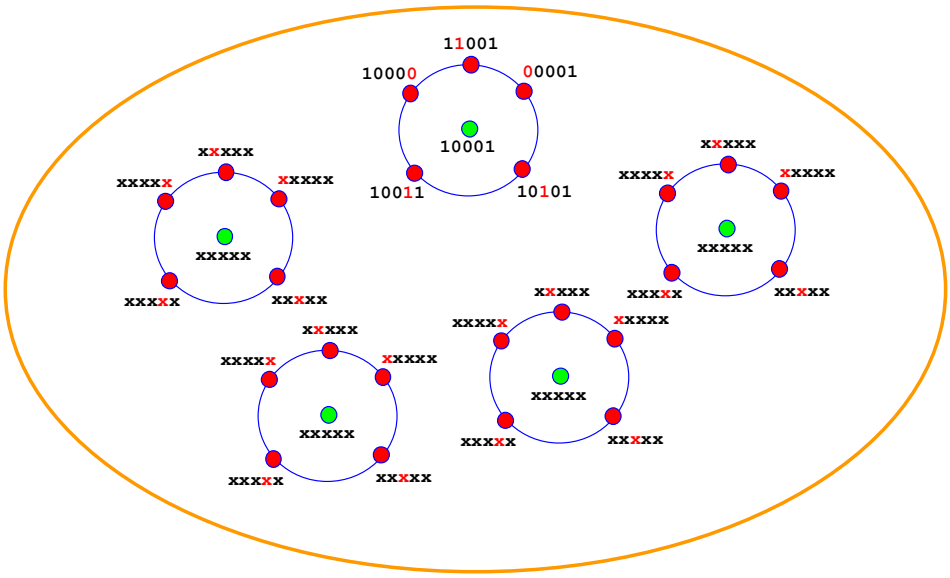

Redundancy

We can write: $(n+1)2^m \leq 2^n$

only if all the groups are separated.

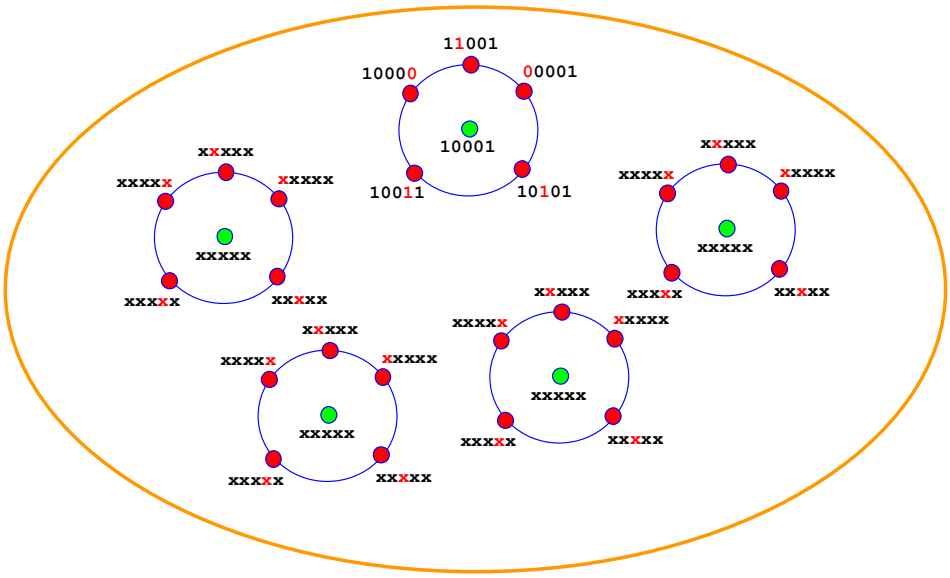

Redundancy

Let suppose that exists a similar scenario

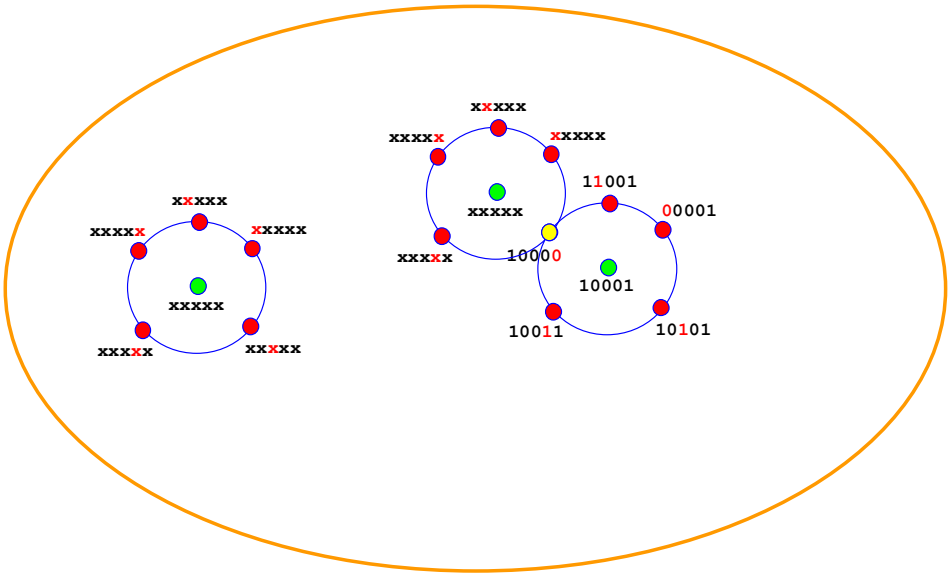

Redundancy

If $d=3$, then $(n+1)2^m \leq 2^n$

Simplifying:

$(m+r+1)2^m \leq 2^{m+r}$

$(m+r+1) \leq 2^r$

$m+1 \leq 2^r - r$

Note: The expression $m+1 \leq 2^r - r$ is valid only for $d=3$.

Examples:

$m=8 \Rightarrow r=4 \qquad (8+4+1) \leq 2^4 \qquad 13 < 16$

$m=11 \Rightarrow r=4 \qquad (11+4+1) \leq 2^4 \qquad 16 = 16$

Redundancy

Exercise:

Calculate r as a function of m when d=5

$$\cancel{m+1 \leq 2^r - r}$$

Redundancy

m	r	n
1	2	3
2	3	5
3	3	6
4	3	7
5	4	9
6	4	10
7	4	11
8	4	12
9	4	13
10	4	14
11	4	15
12	5	17
13	5	18

m	r	n
14	5	19
15	5	20
16	5	21
17	5	22
18	5	23
19	5	24
20	5	25
21	5	26
22	5	27
23	5	28
24	5	29
25	5	30
26	5	31
27	6	33

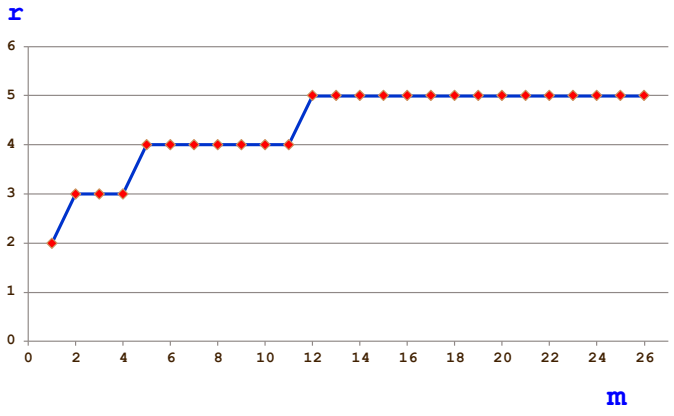

Hamming codes

Suppose we have code built like this:

Data bits

00110010000

Control bits

001100100001100

1 2 4 5 8 9

6=2+4

Hamming Codes

Example:

Original data 10010001100

xx1x001x0001100

1 2 4 8

$b_1 = 3 \otimes 5 \otimes 7 \otimes 9 \otimes 11 \otimes 13 \otimes 15$

$b_2 = 3 \otimes 6 \otimes 7 \otimes 10 \otimes 11 \otimes 14 \otimes 15$

$b_4 = 5 \otimes 6 \otimes 7 \otimes 12 \otimes 13 \otimes 14 \otimes 15$

$b_8 = 9 \otimes 10 \otimes 11 \otimes 12 \otimes 13 \otimes 14 \otimes 15$

3 = 1+2

5 = 1 +4

6 = 2+4

7 = 1+2+4

9 = 1 +8

10 = 2 +8

11 = 1+2 +8

12 = 4+8

13 = 1 +4+8

14 = 2+4+8

15 = 1+2+4+8

Hamming Codes

xx1x001x0001100

1 2 4 8

$b_1 = 3 \otimes 5 \otimes 7 \otimes 9 \otimes 11 \otimes 13 \otimes 15$

$b_2 = 3 \otimes 6 \otimes 7 \otimes 10 \otimes 11 \otimes 14 \otimes 15$

$b_4 = 5 \otimes 6 \otimes 7 \otimes 12 \otimes 13 \otimes 14 \otimes 15$

$b_8 = 9 \otimes 10 \otimes 11 \otimes 12 \otimes 13 \otimes 14 \otimes 15$

$b_1 = 1 \otimes 0 \otimes 1 \otimes 0 \otimes 0 \otimes 1 \otimes 0 = 1$

$b_2 = 1 \otimes 0 \otimes 1 \otimes 0 \otimes 0 \otimes 0 \otimes 0 = 0$

$b_4 = 0 \otimes 0 \otimes 1 \otimes 1 \otimes 1 \otimes 0 \otimes 0 = 1$

$b_8 = 0 \otimes 0 \otimes 0 \otimes 1 \otimes 1 \otimes 0 \otimes 0 = 0$

1011001000001100

Hamming Codes

Let's enter an error: 1011001001 01100

1 2 4 8

$b_1 = 3 \otimes 5 \otimes 7 \otimes 9 \otimes 11 \otimes 13 \otimes 15$

$b_2 = 3 \otimes 6 \otimes 7 \otimes 10 \otimes 11 \otimes 14 \otimes 15$

$b_4 = 5 \otimes 6 \otimes 7 \otimes 12 \otimes 13 \otimes 14 \otimes 15$

$b_8 = 9 \otimes 10 \otimes 11 \otimes 12 \otimes 13 \otimes 14 \otimes 15$

$b_1 = 1 \otimes 0 \otimes 1 \otimes 0 \otimes 0 \otimes 1 \otimes 0 = 1$

$b_2 = 1 \otimes 0 \otimes 1 \otimes 1 \otimes 0 \otimes 0 \otimes 0 = 1$

$b_4 = 0 \otimes 0 \otimes 1 \otimes 1 \otimes 1 \otimes 0 \otimes 0 = 1$

$b_8 = 0 \otimes 1 \otimes 0 \otimes 1 \otimes 1 \otimes 0 \otimes 0 = 1$

Hamming Codes

```
1011001001 01100
↑ ↑ ↑     ↑  ↑
1 2 4     8  10
```

$b_1 = 1$

$b_2 = 1$

$b_4 = 1$

$b_8 = 1$

2 + 8 = 10 !

3	=	1+2
5	=	1 +4
6	=	2+4
7	=	1+2+4
9	=	1 +8
10	=	2 +8
11	=	1+2 +8
12	=	4+8
13	=	1 +4+8
14	=	2+4+8
15	=	1+2+4+8

Hamming Codes

xx1x110xx0x011xx0x110xx1x000xx0x011xx1x100xx0x001xx0x11
0xx1x011xx1x110xx1x001xx0x011

xx1x110
xx0x011
xx0x110
xx1x000
xx0x011
xx1x100
xx0x001
xx0x110
xx1x011
xx1x110
xx1x001
xx0x011

Hamming Codes

```
xx1x110
xx0x011
xx0x110
xx1x000
xx0x011
xx1x100
xx0x001
xx0x110
xx1x011
xx1x110
xx1x001
xx0x011
```

```
xxxxxxxxxxxxxxxxxxxxxxxx100101001110xxxxxxxxxxxx101001
01010011101001110101001010101 1
```

```
xxxxxxxxxxxxxxxxxxxxxxxx100101001110xxxxxxxxxxxx101001
0101000001011110101001010101 1
```

Hamming Codes

xxxxxxxxxxxxxxxxxxxxxxxx100101001110xxxxxxxxxxxx101001
0101000001011110101001010101011

xx1x100
xx0x001
xx0x100
xx1x010
xx0x001
xx1x110
xx0x011
xx0x110
xx1x011
xx1x110
xx1x001
xx0x011

ECC RAM

Error Correction Code RAM

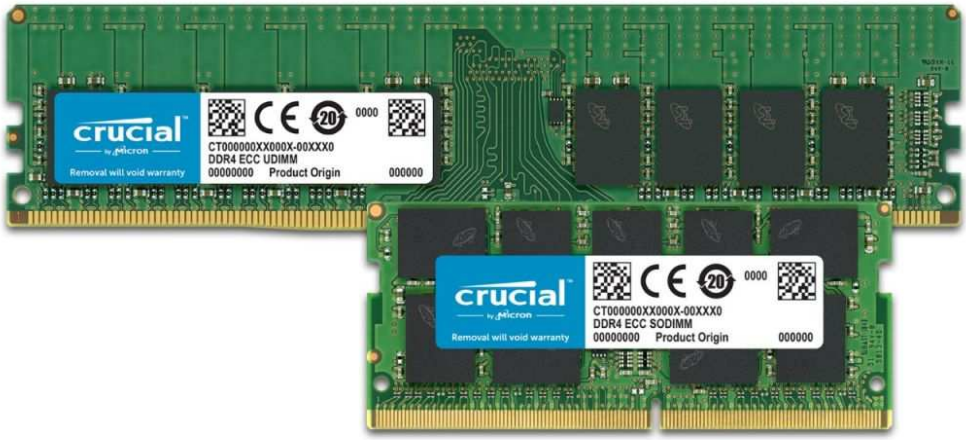

Access to the Channel

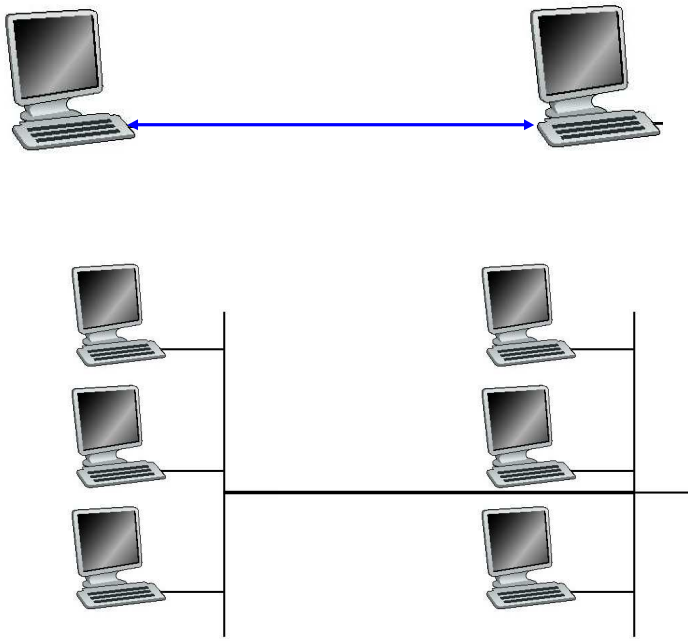

Multiple access

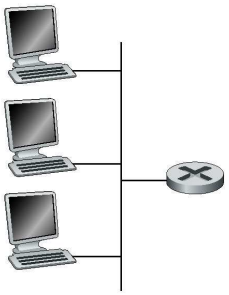

Satellite

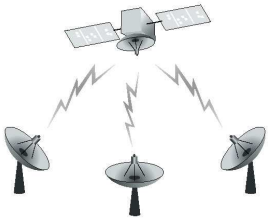

Cocktail party

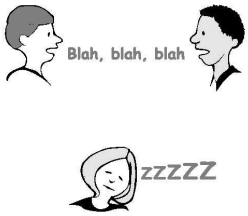

Multiple access

FDMA
Frequency Division Multiple Access

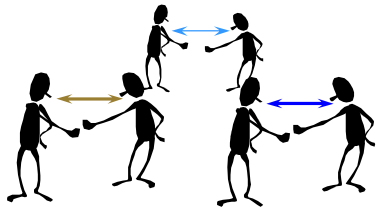

"Private Conversation"

TDMA
Time Division Multiple Access

"Meeting"

CDMA
Code Division Multiple Access

"Cocktail Party"

Multiple Access

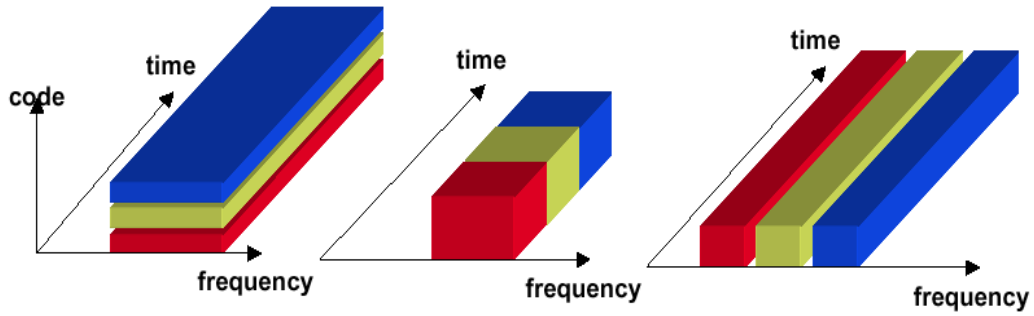

CDMA: Code Division Multiple Access

FDMA: Frequency Division Multiple Access

TDMA: Time Division Multiple Access

Channel partitioning MAC protocols: TDMA

TDMA: time division multiple access

- access to channel in “rounds”
- each station gets fixed length slot (length = packet transmission time) in each round
- unused slots go idle
- example: 6-station LAN, 1,3,4 have packets to send, slots 2,5,6 idle

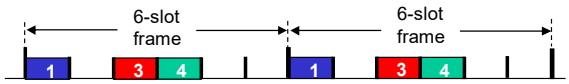

Channel partitioning MAC protocols: FDMA

FDMA: frequency division multiple access

- channel spectrum divided into frequency bands
- each station assigned fixed frequency band
- unused transmission time in frequency bands go idle
- example: 6-station LAN, 1,3,4 have packet to send, frequency bands 2,5,6 idle

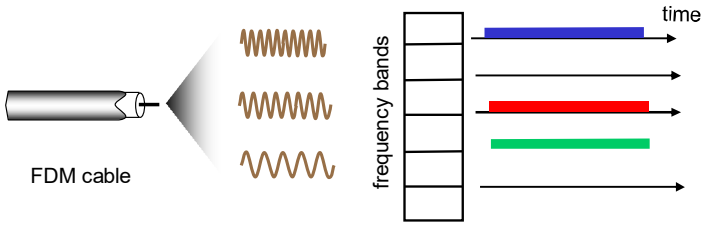

Code Division Multiple Access

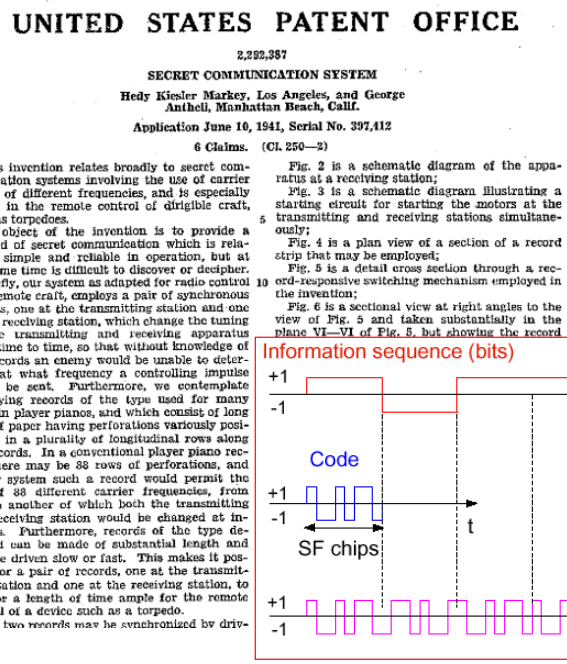

UNITED STATES PATENT OFFICE

2,292,387

SECRET COMMUNICATION SYSTEM

Hedy Kiesler Markey, Los Angeles, and George Antheil, Manhattan Beach, Calif.

Application June 10, 1941, Serial No. 397,412

6 Claims. (Cl. 250—2)

This invention relates broadly to secret communication systems involving the use of carrier waves of different frequencies, and is especially useful in the remote control of dirigible craft, such as torpedoes.

An object of the invention is to provide a method of secret communication which is relatively simple and reliable in operation, but at the same time is difficult to discover or decipher.

Briefly, our system as adapted for radio control of a remote craft, employs a pair of synchronous records, one at the transmitting station and one at the receiving station, which change the tuning of the transmitting and receiving apparatus from time to time, so that without knowledge of the records an enemy would be unable to determine at what frequency a controlling impulse would be sent. Furthermore, we contemplate employing records of the type used for many years in player pianos, and which consist of long rolls of paper having perforations variously positioned in a plurality of longitudinal rows along the records. In a conventional player piano record there may be 88 rows of perforations, and in our system such a record would permit the use of 88 different carrier frequencies, from one to another of which both the transmitting and receiving station would be changed at intervals. Furthermore, records of the type described can be made of substantial length and may be driven slow or fast. This makes it possible for a pair of records, one at the transmitting station and one at the receiving station, to run for a length of time ample for the remote control of a device such as a torpedo.

The two records may be synchronized by driv-

Fig. 2 is a schematic diagram of the apparatus at a receiving station;

Fig. 3 is a schematic diagram illustrating a starting circuit for starting the motors at the transmitting and receiving stations simultaneously;

Fig. 4 is a plan view of a section of a record strip that may be employed;

Fig. 5 is a detail cross section through a record-responsive switching mechanism employed in the invention;

Fig. 6 is a sectional view at right angles to the view of Fig. 5 and taken substantially in the plane VI—VI of Fig. 5, but showing the record

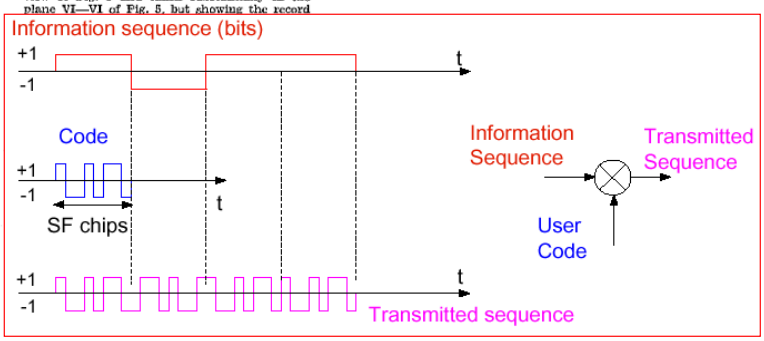

Code Division Multiple Access

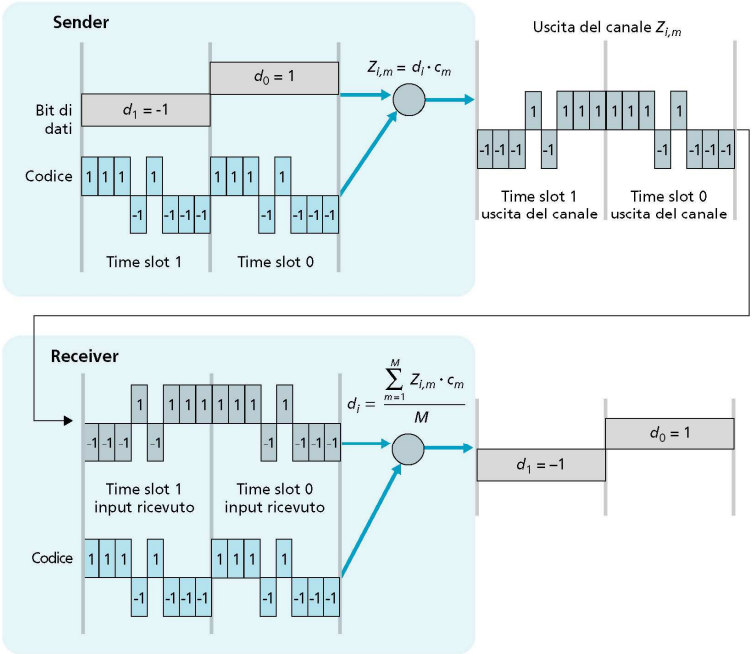

Code Division Multiple Access

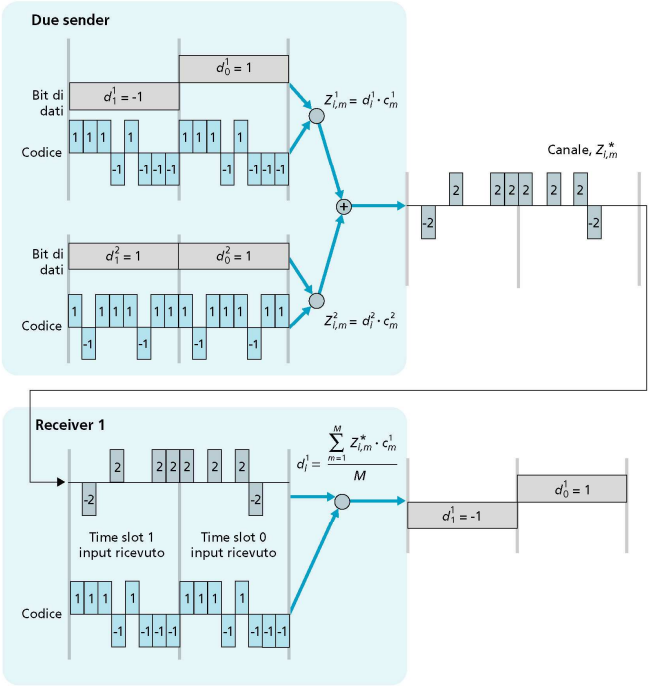

Pure ALOHA

- unslotted Aloha: simpler, no synchronization
  - when frame first arrives: transmit immediately
- collision probability increases with no synchronization:
  - frame sent at t_0 collides with other frames sent in $[t_0-1, t_0+1]$

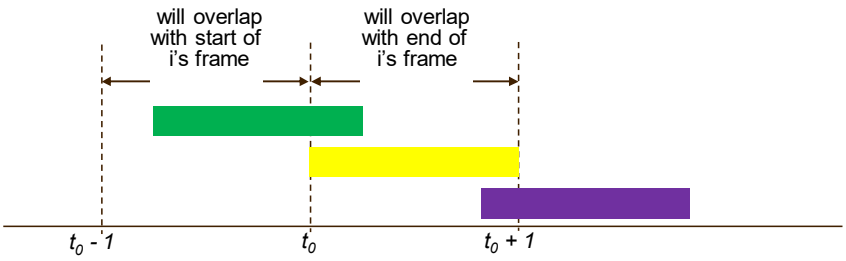

ALOHA

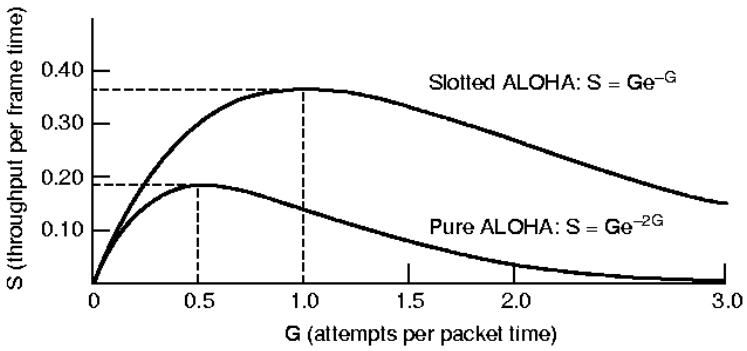

The maximum throughput occurs for G=0.5 with S=0.184.

The channel is therefore used for a maximum of 18.4% of its potential.

Slotted ALOHA

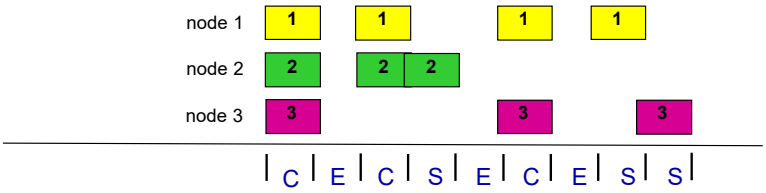

C: collision
S: success
E: empty

Pros:

- single active node can continuously transmit at full rate of channel
- highly decentralized: only slots in nodes need to be in sync
- simple

Cons:

- collisions, wasting slots
- idle slots
- nodes may be able to detect collision in less than time to transmit packet
- clock synchronization

CSMA protocols

In the CSMA 1-persistent protocol a station transmits a new frame when the carrier disappear.

Instead, in the CSMA p-persistent protocol, a station transmits (after the disappearance of the carrier) with a probability p.

In the CSMA non-persistent a station waits a random delay before to check the channel.

CSMA protocols

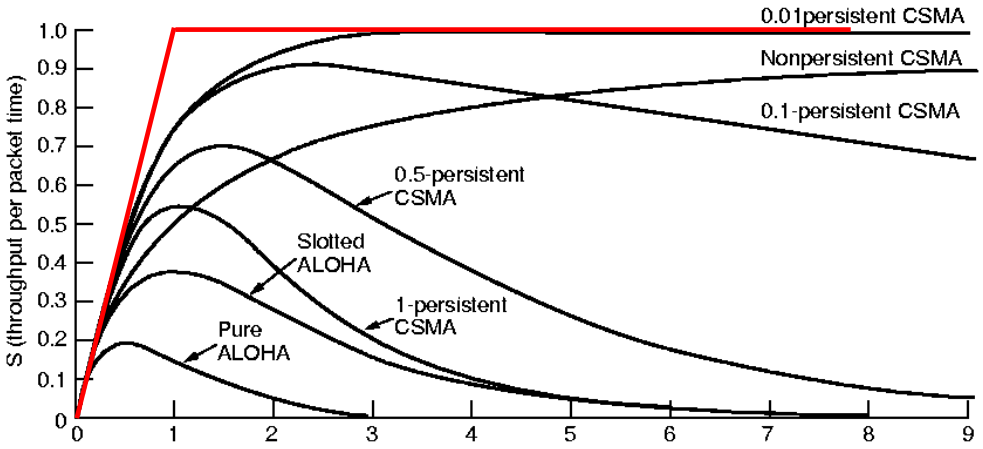

CSMA (carrier sense multiple access)

simple CSMA: listen before transmit:

- if channel sensed idle: transmit entire frame
- if channel sensed busy: defer transmission

▪ human analogy: don't interrupt others!

CSMA/CD: CSMA with *collision detection*

- collisions *detected* within short time
- colliding transmissions aborted, reducing channel wastage
- collision detection easy in wired, difficult with wireless

▪ human analogy: the polite conversationalist

CSMA / CD

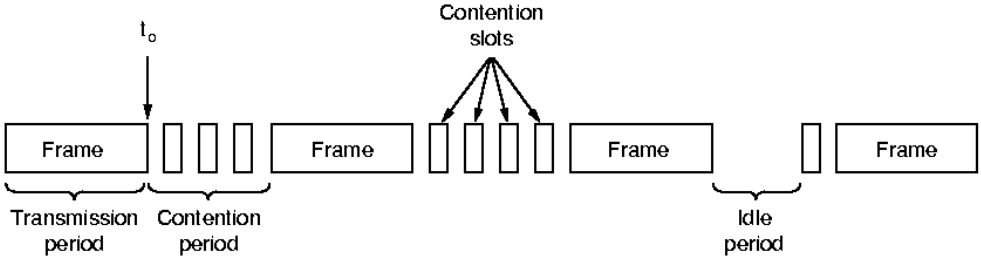
Contention
slots
t_o
Frame
Frame
Frame
Frame
Transmission
period
Contention
period
Idle
period

CSMA / CD

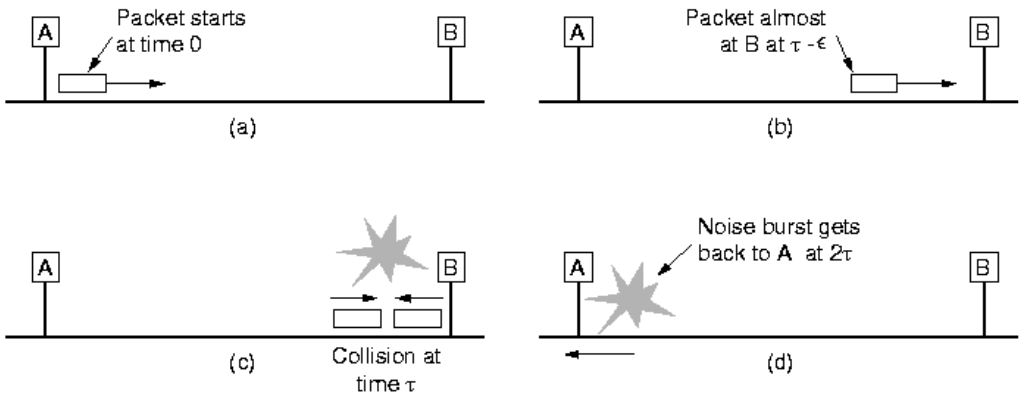
A
B
Packet starts
at time 0
(a)
A
B
Packet almost
at B at τ -ϵ
(b)
A
B
(c)
Collision at
time τ
A
B
Noise burst gets
back to A at 2τ
(d)

CSMA vs CSMA /CD

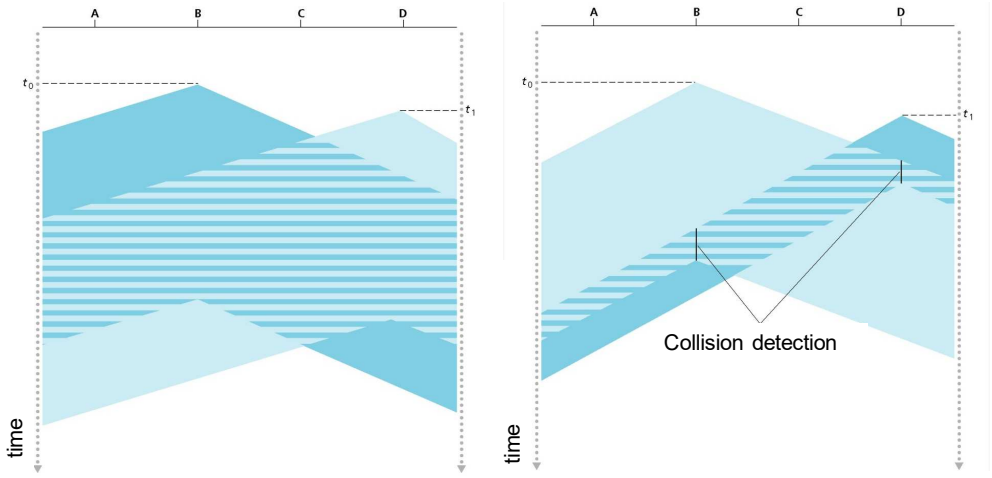

Protocols without collision

Bit map protocol

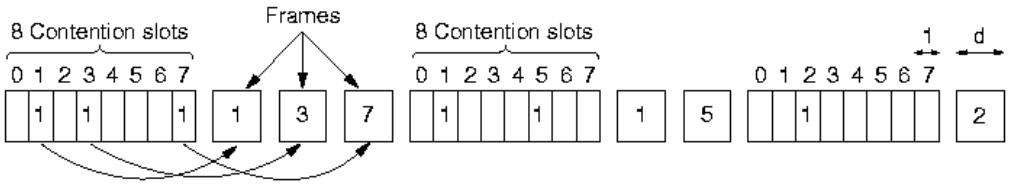

Protocols without collision

Binary backward counting

- CSMA/BA Carrier Sense Multiple Access with Bitwise Arbitration
- CanBus

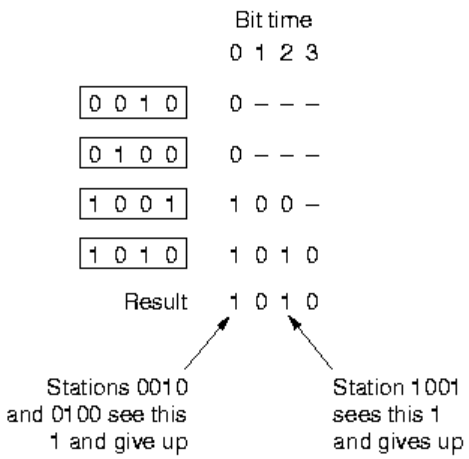

“Taking turns” protocols

Token Bus

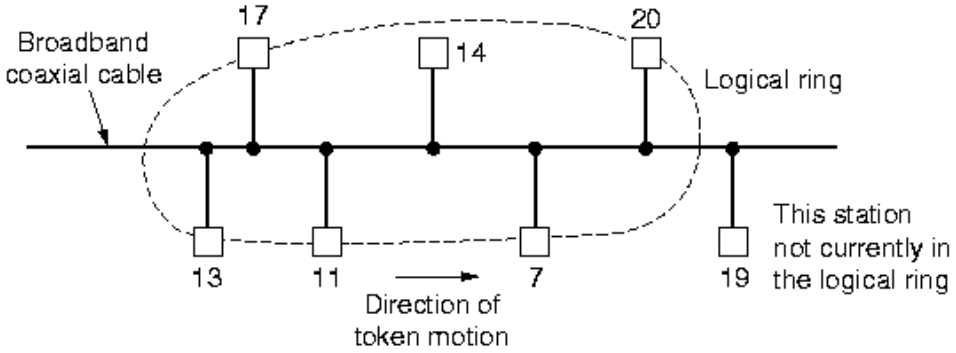

Ethernet

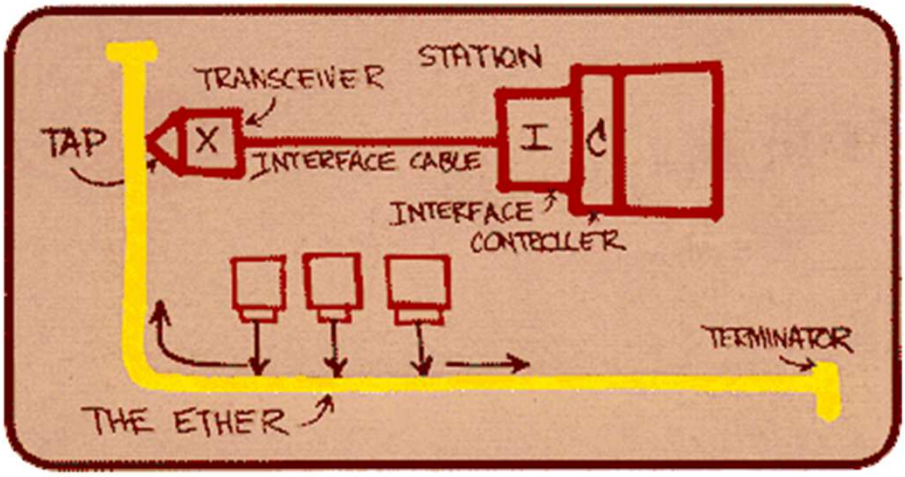
TRANSCEIVER
STATION
TAP
X
INTERFACE CABLE
I
C
INTERFACE
CONTROLLER
TERMINATOR
THE ETHER

IEEE 802

802.1 High Level Interface (HILI)

802.2 Logical Link Control (LLC) [in 'hibernation']

802.3 CSMA/CD

802.4 Token Bus [in 'hibernation']

802.5 Token Ring [in 'hibernation']

802.6 Metropolitan Area Network (MAN) [in 'hibernation']

802.7 BroadBand Technical Adv. Group (BBTAG) [in 'hibernation']

802.8 Fiber Optics Technical Adv. Group (FOTAG) [disbanded]

802.9 Integrated Services LAN (ISLAN) [in 'hibernation']

IEEE 802

802.10 Standard for Interoperable LAN Security (SILS) [in 'hibernation]

802.11 Wireless LAN (WLAN)

802.12 Demand Priority [in 'hibernation']

802.14 Cable-TV Based Broadband Comm. Network [disbanded]

802.15 Wireless Personal Area Network (WPAN)

802.16 Broadband Wireless Access (BBWA)

802.17 Resilient Packet Ring (RPR)

802.18 Radio Regulatory Technical Advisory Group

802.19 Coexistence Technical Advisory Group

802.3

Date	IEEE std.	Name	Data rate	Type of cabling
1990	802.3i	10BASE-T	10 Mbps	Cat 3
1995	802.3u	100BASE-TX	100 Mbps	Cat 5
1998	802.3z	1000BASE-SX 1000BASE-LX/EX	1 Gbps	Multimode fiber Single mode fiber
1999	802.3ab	1000BASE-T	1 Gbps	Cat 5e
2003	802.3ae	10GBASE-SR 10GBASE-LR/ER	10 Gbps	Laser MMF Single mode fiber
2006	802.3an	10GBASE-T	10 Gbps	Cat 6a
2015	802.3bq	40GBASE-T	40 Gbps	Cat 8
2016	802.3bz	2.5GBASE-T 5GBASE-T	2.5 Gbps 5 Gbps	Cat 5e Cat 6
2010 2015	802.3ba 802.3ba 802.3bm	40GBASE-SR4/LR4 100GBASE-SR10/LR4/ER4 100GBASE-SR4	40 Gbps 100 Gbps 100 Gbps	Laser
2017	802.3bs	200GBASE 400GBASE	200 Gbps 400 Gbps	
2024	802.3df	800GBASE 1.6TBASE	800 Gbps 1.6 Tbps	

Ethernet CSMA/CD algorithm

1) Ethernet receives datagram from network layer, creates frame
2) If Ethernet senses channel:
   - if idle: start frame transmission.
   - if busy: wait until channel idle, then transmit
3) If entire frame transmitted without collision - done!
4) If another transmission detected while sending: abort, send jam signal
5) After aborting, enter *binary (exponential) backoff:*
   - after m^{th} collision, chooses K at random from $\{0,1,2, \ldots, 2^m-1\}$. Ethernet waits $K \cdot 512$ bit times, returns to Step 2
   - more collisions: longer backoff interval

Cabling

Name	Cable	Max. seg.	Nodes/seg.	Advantages
10Base5	Thick coax	500 m	100	Original cable; now obsolete
10Base2	Thin coax	185 m	30	No hub needed
10Base-T	Twisted pair	100 m	1024	Cheapest system
10Base-F	Fiber optics	2000 m	1024	Best between buildings

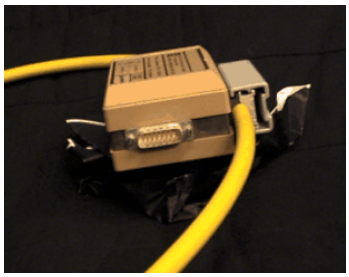

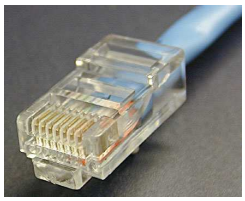

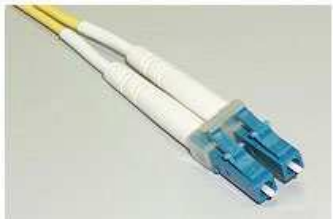

Cabling

Name	Cable	Max. seg.	Nodes/seg.	Advantages
10Base5	Thick coax	500 m	100	Original cable; now obsolete
10Base2	Thin coax	185 m	30	No hub needed
10Base-T	Twisted pair	100 m	1024	Cheapest system
10Base-F	Fiber optics	2000 m	1024	Best between buildings

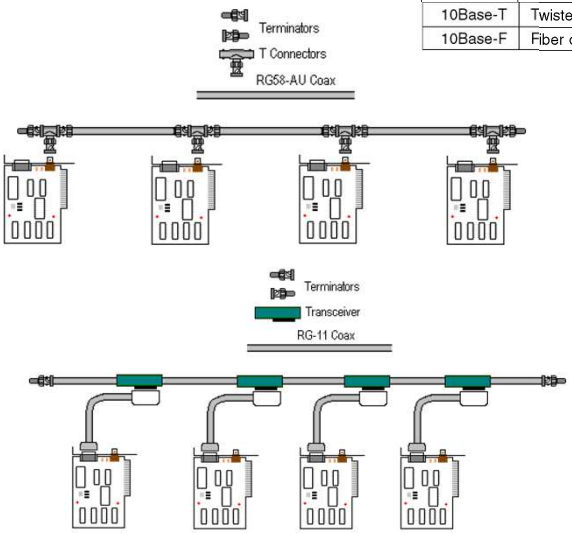

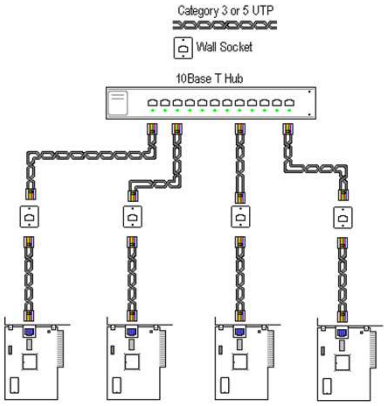

Cabling

Category	Data Rate	Signal Frequency	Standard
Cat5	100 Mbps	100 MHz	TIA/EIA
Cat5e	100 Mbps /1 Gbps	100 MHz	TIA/EIA-568-B
Cat6	1Gbps / 10 Gbps	250 MHz	TIA/EIA-568-B
Cat6a	1Gbps / 10 Gbps	500 MHz	ANSI/TIA/EIA-568-B.2-10

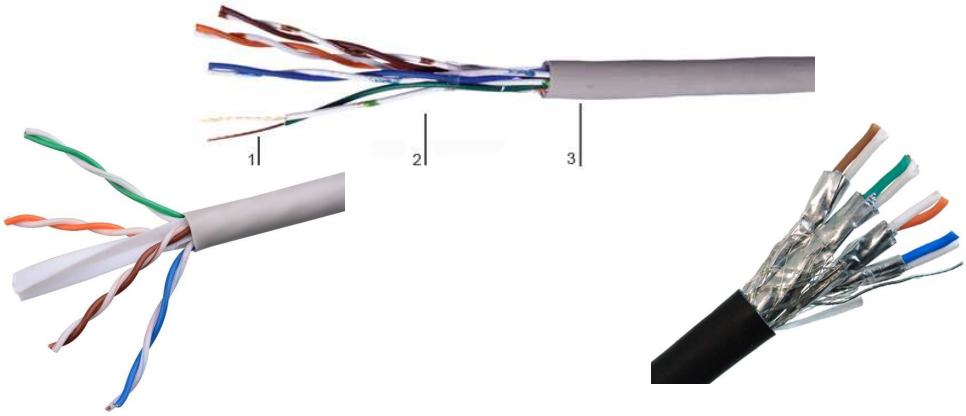

Cabling

UTP FTP STP SFTP

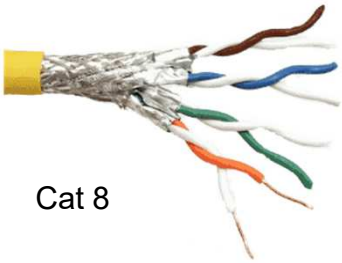

Cat 8

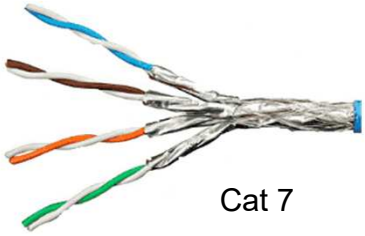

Cat 7

Cabling

Color	Pin (T568B)	Usage
White/Orange	1	Transmission (Tx+)
Orange	2	Transmission (Tx-)
White/Green	3	Receive (Rx+)
Blue	4	--
White/Blue	5	--
Green	6	Receive (Rx-)
White/Brown	7	--
Brown	8	--

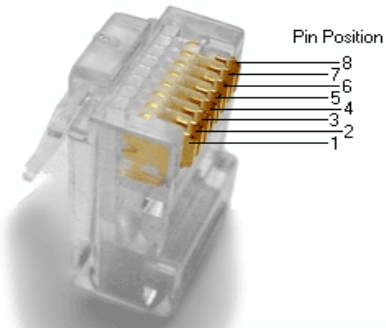

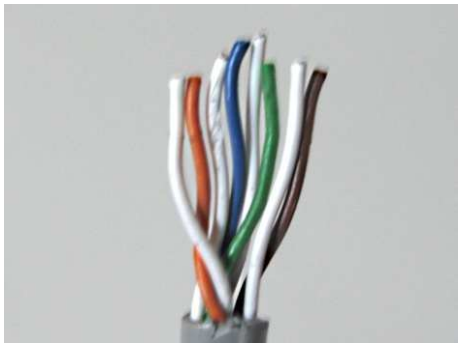

Frame ethernet

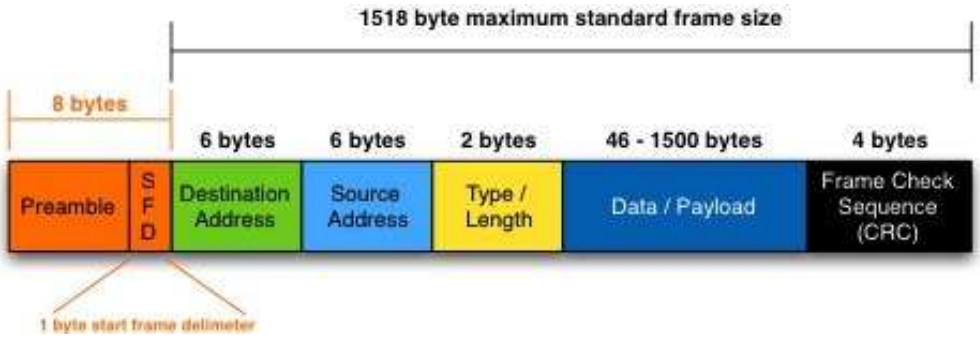

The E-type/size field indicates the length of the data field for values lower than 1500, while it indicates the frame type for higher values.

The type field is used for mux/demux on the network layer.

Ethernet type

0x0800 IPv4

0x0806 ARP

0x0842 Wake-on-Lan

0x8035 RARP

0x809B Ethertalk

0x80F3 AppleTalk Address Resolution Protocol (AARP)

0x8100 VLAN-tagged frame (IEEE 802.1Q)

0x8137 Novell IPX

0x8138 Novell

0x86DD IPv6

…

Manchester encoding

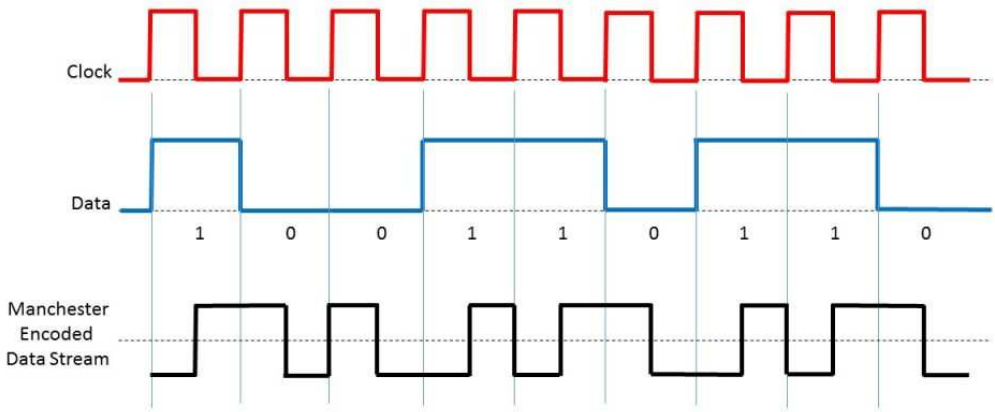

Manchester encoding

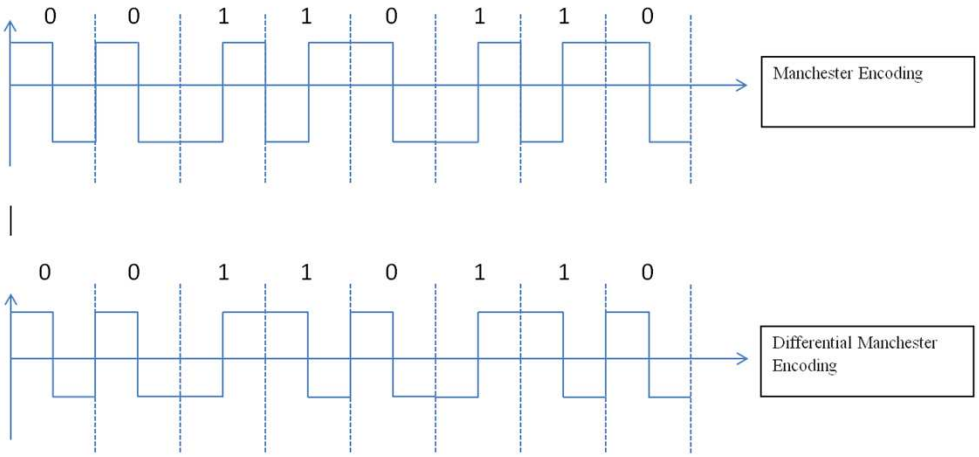

Fast Ethernet

Name	Cable	Max. segment	Advantages
100Base-T4	Twisted pair	100 m	Uses category 3 UTP
100Base-TX	Twisted pair	100 m	Full duplex at 100 Mbps
100Base-FX	Fiber optics	2000 m	Full duplex at 100 Mbps; long runs

100Base-T4 uses the 8B6T encoding technique and uses all the couples present.

100Base-TX uses 4B5B.

Fast Ethernet

TABLE 3.1 Fast Ethernet and FDDI 4B/5B Codes

Four-Bit Data	Five-Bit Encoding
0000 (0)	1 1 1 1 0
0001 (1)	0 1 0 0 1
0002 (2)	1 0 1 0 0
0003 (3)	1 0 1 0 1
0004 (4)	0 1 0 1 0
0005 (5)	0 1 0 1 1
0006 (6)	0 1 1 1 0
0007 (7)	0 1 1 1 1
0008 (8)	1 0 0 1 0
0009 (9)	1 0 0 1 1
1010 (A)	1 0 1 1 0
1011 (B)	1 0 1 1 1
1100 (C)	1 1 0 1 0
1101 (D)	1 1 0 1 1
1110 (E)	1 1 1 0 0
1111 (F)	1 1 1 0 1
S (Set)	1 1 0 0 1
R (Reset)	0 0 1 1 1
Q (Quiet)	0 0 0 0 0
I (Idle)	1 1 1 1 1
H (Halt)	0 0 1 0 0
T (Terminate)	0 1 1 0 1
J (Start 1)	1 1 0 0 0
K (Start 2)	1 0 0 0 1

Gigabit Ethernet

Name	Cable	Max. segment	Advantages
1000Base-SX	Fiber optics	550 m	Multimode fiber (50, 62.5 microns)
1000Base-LX	Fiber optics	5000 m	Single (10 μ) or multimode (50, 62.5 μ)
1000Base-CX	2 Pairs of STP	25 m	Shielded twisted pair
1000Base-T	4 Pairs of UTP	100 m	Standard category 5 UTP

Gigabit Ethernet

Five steps towards 1000BASE-T (with cat5e)

- remove 4B5B (100 ->125 Mbps).
- use all the 4 couples at the same time (125 -> 500Mbps).
- full duplex transmission (500Mbps full-duplex).
- use 5 levels per baud instead of 3 (MLT-3) (5x5x5x5 => 2Gbps full-duplex).
- Introduce a forward error correction (FEC) to recover 6dB.

Gigabit Ethernet

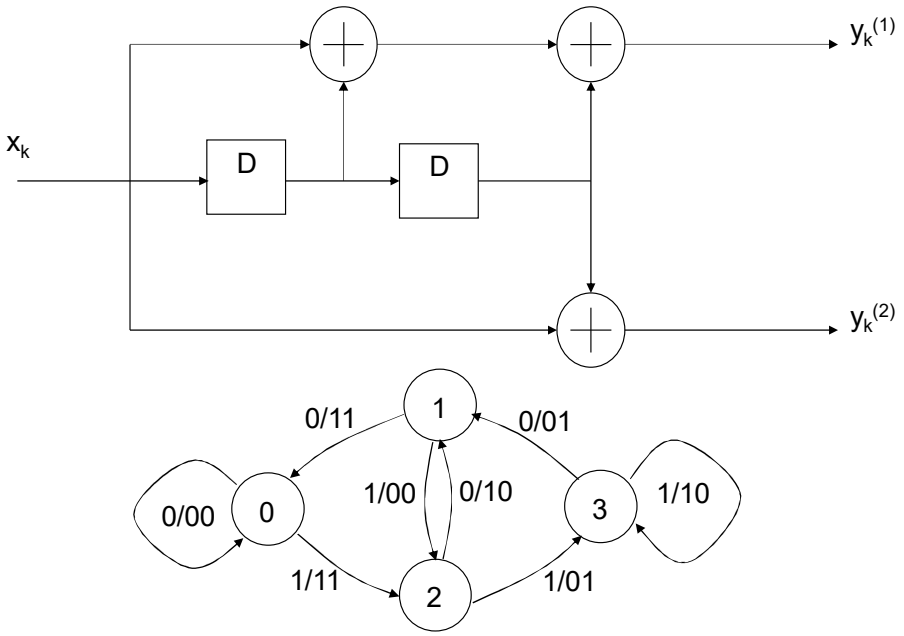

Gigabit Ethernet

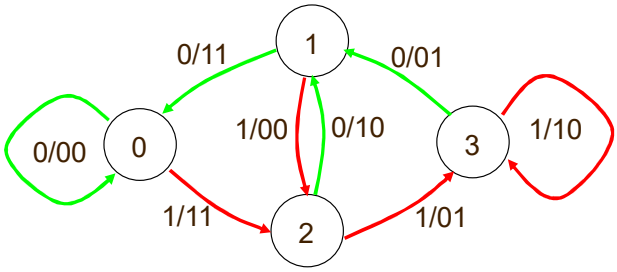

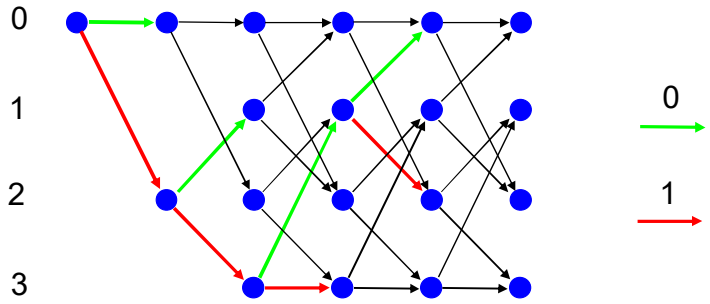

Gigabit Ethernet

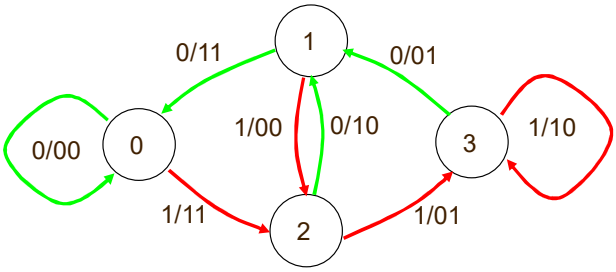

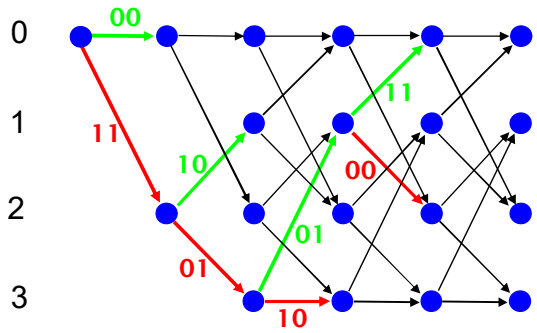

Gigabit Ethernet

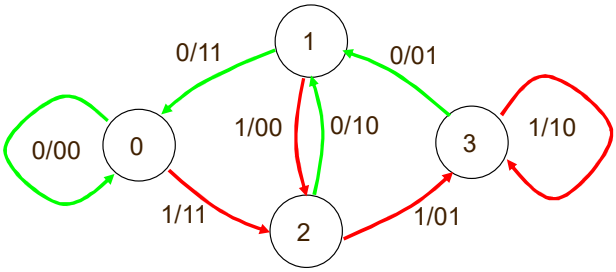

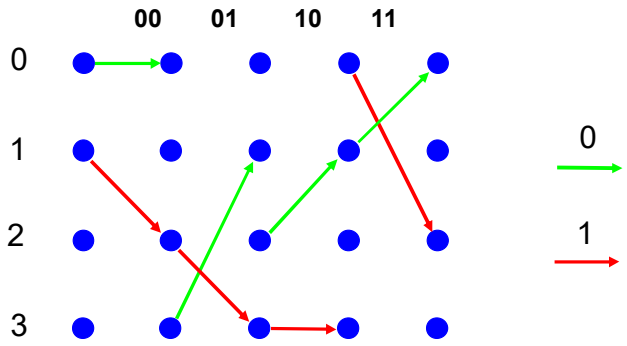

Gigabit Ethernet

0 1 1 0 0 1

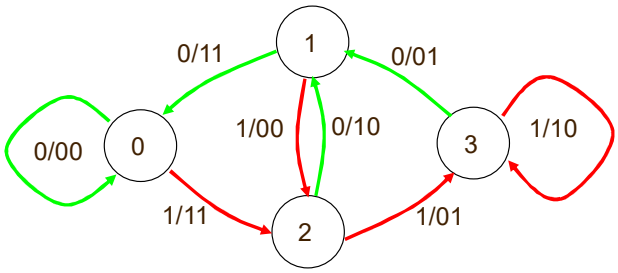

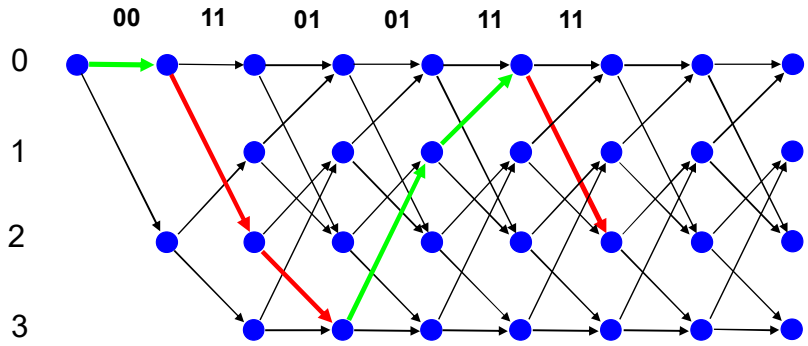

Gigabit Ethernet

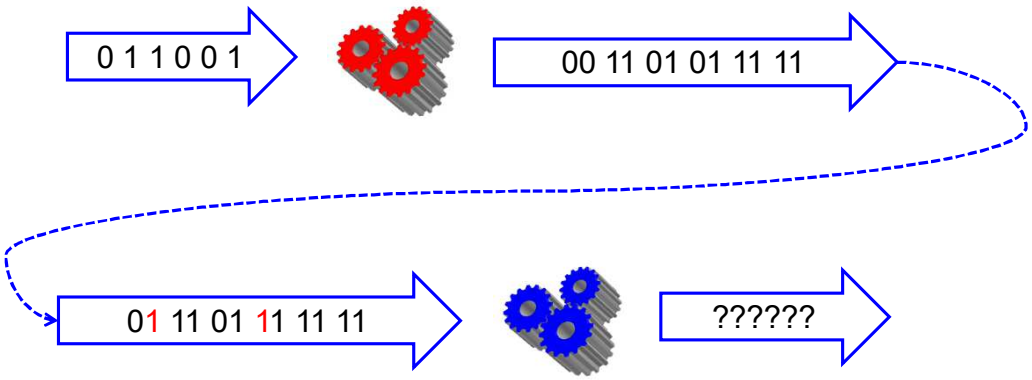

Gigabit Ethernet

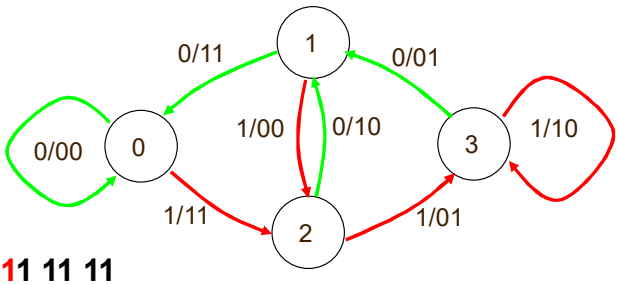

01 11 01 11 11 11

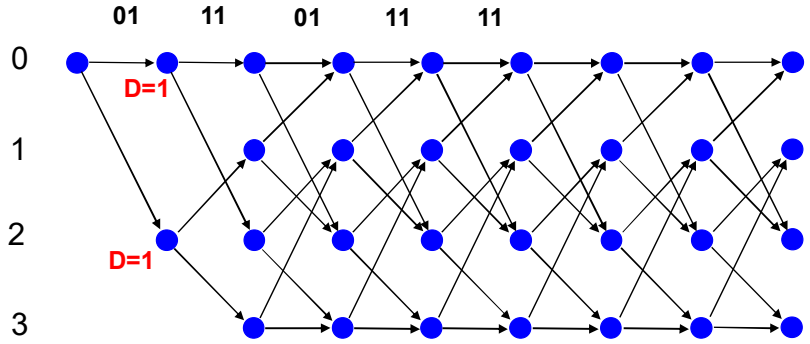

Gigabit Ethernet

01 11 01 11 11 11

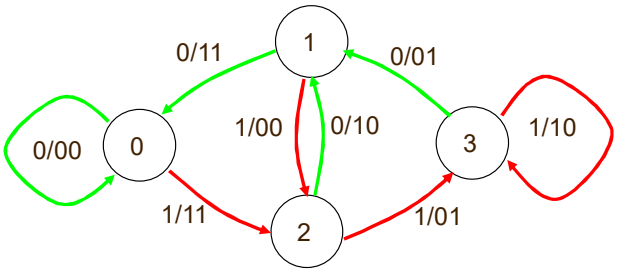

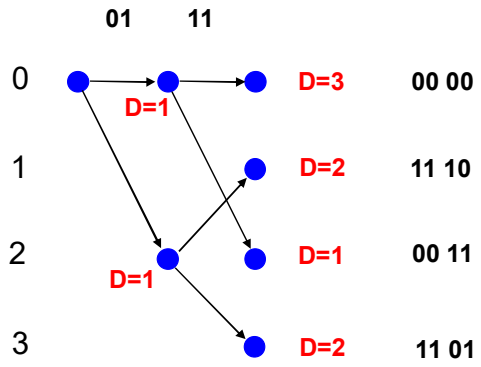

Gigabit Ethernet

01 11 01 11 11 11

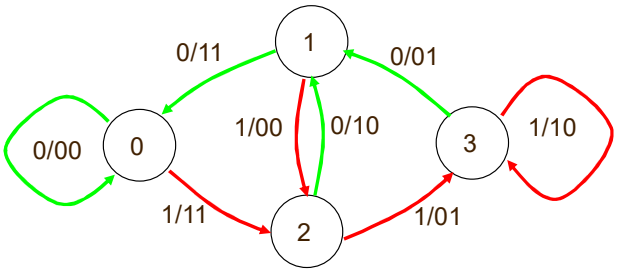

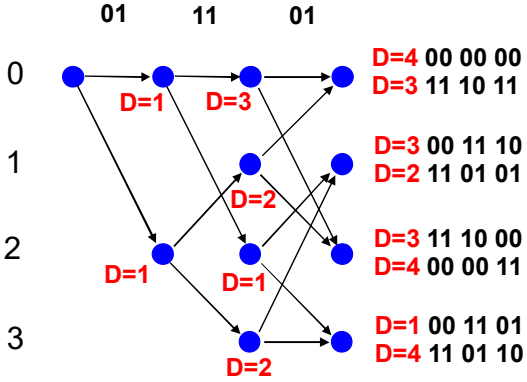

Gigabit Ethernet

01 11 01 11 11 11

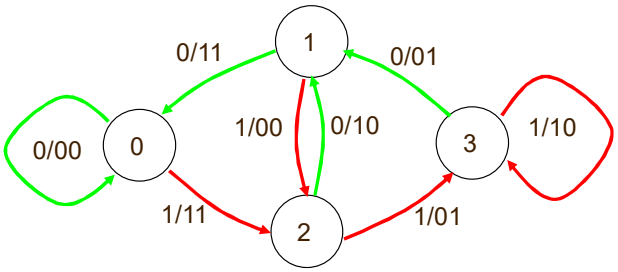

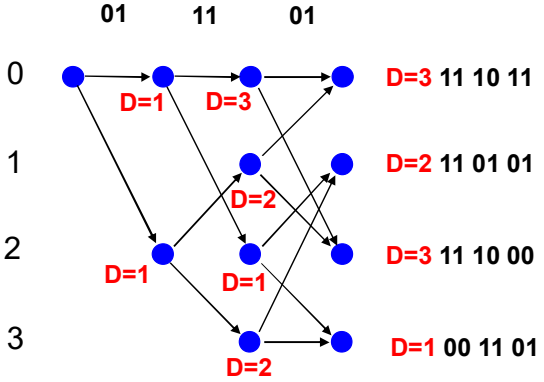

Gigabit Ethernet

01 11 01 11 11 11

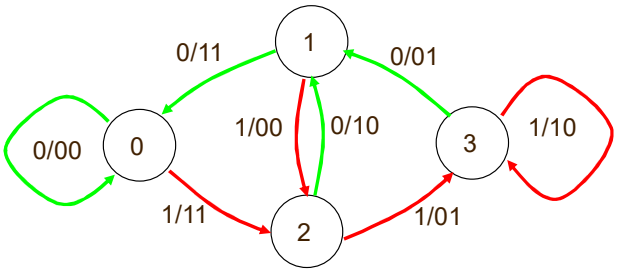

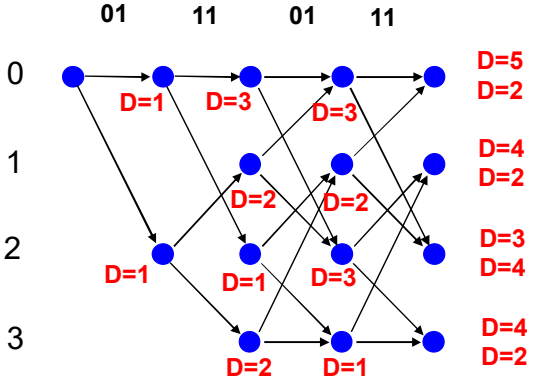

Gigabit Ethernet

01 11 01 11 11 11

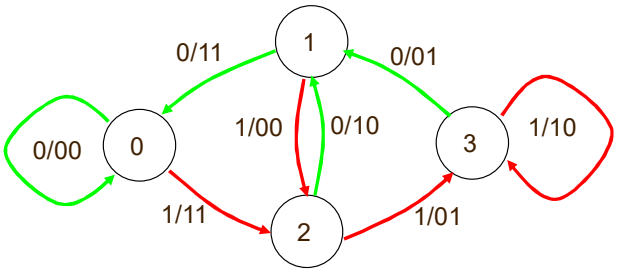

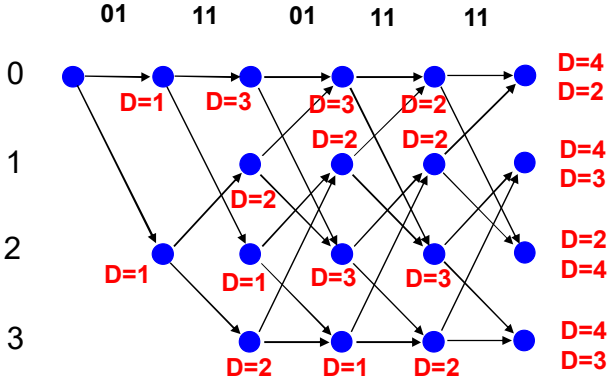

Gigabit Ethernet

01 11 01 11 11 11

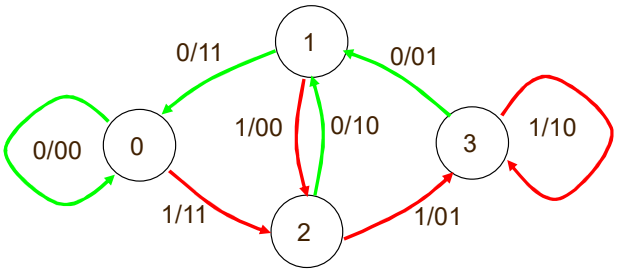

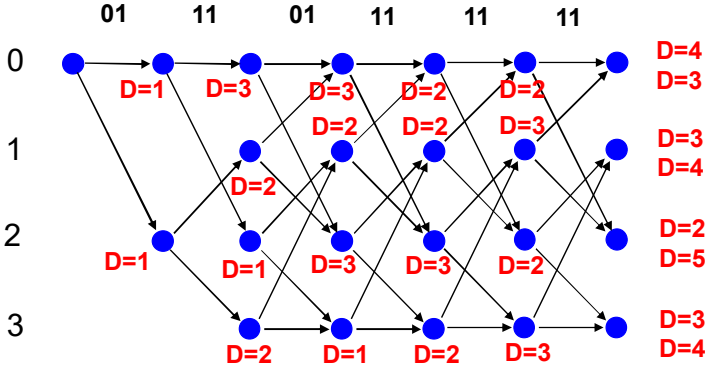

Gigabit Ethernet

01 11 01 11 11 11

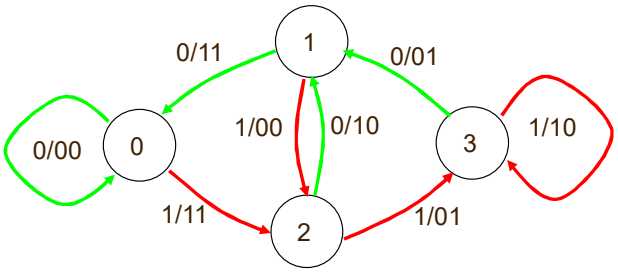

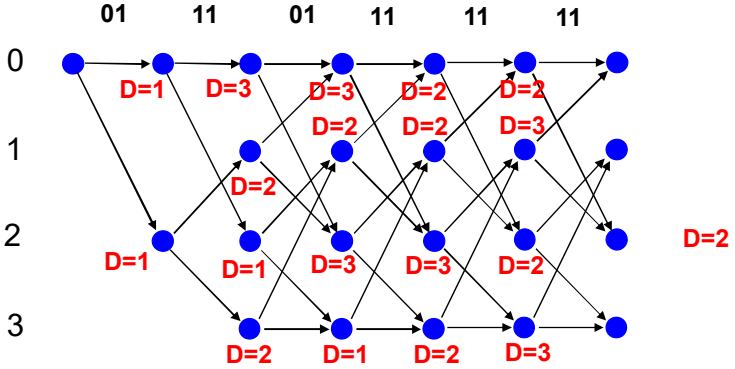

Gigabit Ethernet

01 11 01 11 11 11

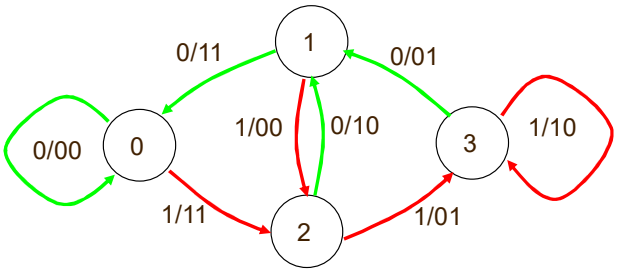

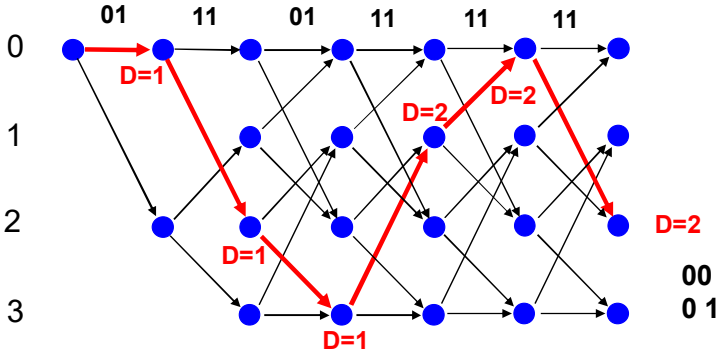

00 11 01 01 11 11
0 1 1 0 0 1

Resume 10 – 100 – 1000 Mbps

technology	Maximum link length	encoding	Medium Topology		Bit rate (bps)
10Base5	500 m	Manchester	bus	50-ohm coax	10 M
10Base2	185 m	Manchester	bus	50-ohm coax	10 M
10BaseT	100 m	Manchester	star	2 pair UTP cat. 3,4,5	10
100BaseFL 100BaseT2	2000 m 100 m	Manchester PAM 5x5	star star	Multi-mode fiber* 2 pairs UTP cat. 3,4,5	10 M 100 M
100BaseT4	100 m	8B/6T	star	4 pairs UTP cat. 3,4,5	100 M
100BaseTX	100 m	4B/5B with MLT-3	star	2 pairs UTP cat. 5	100 M
100BaseFX 1000BaseT	412/2000 m 100 m	4B/5B with NRZI PAM 5x5	star star	Multi-mode fiber* 4 pairs UTP Cat 5	100 M 1000 M
1000BaseSX	275 m	8B/10B	star	Multi-mode fiber†	1000 M
1000BaseLX	316/550 m	8B/10B	star	Multi-modeFiber‡	1000 M
1000BaseCX	25 m	8B/10B	star	Twinax	1000 M

Over 1Gbps

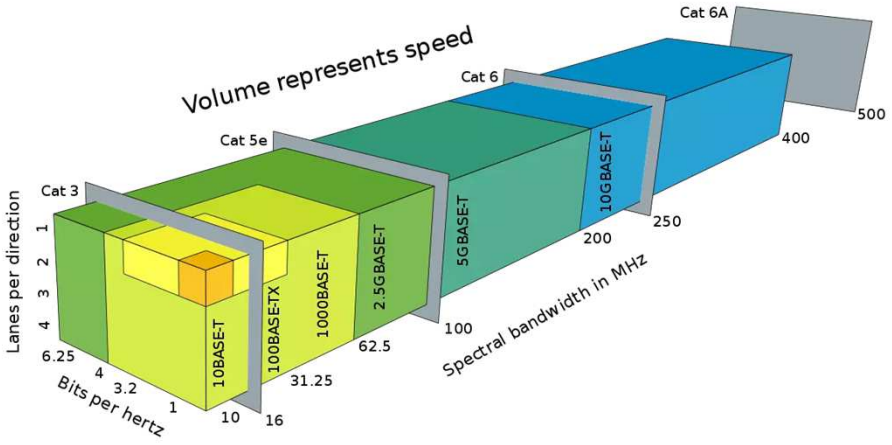
Volume represents speed
Cat 3
Cat 5e
Cat 6
Cat 6A
Lanes per direction
1
2
3
4
6.25
4
3.2
1
Bits per hertz
10BASE-T
10
100BASE-TX
16
1000BASE-T
31.25
2.5GBASE-T
62.5
5GBASE-T
100
10GBASE-T
200
250
400
500
Spectral bandwidth in MHz

40 Gbps

Standard	Transfer speed[a]	Channels per direction[b]	Bits per Hertz per channel[c]	Spectral bandwidth[d]	Cable req. 100 m	Cable spec 100 m
10BASE-T	10 Mbit/s	1	1	10 MHz	Cat 3	16 MHz
100BASE-TX	100 Mbit/s	1	3.2	31.25 MHz	Cat 5	100 MHz
1000BASE-T	1000 Mbit/s	4	4	62.5 MHz	Cat 5e	100 MHz
2.5GBASE-T	2500 Mbit/s	4	6.25	100 MHz	Cat 5e	100 MHz
5GBASE-T	5000 Mbit/s	4	6.25	200 MHz	Cat 6	250 MHz
10GBASE-T	10000 Mbit/s	4	6.25	400 MHz	Cat 6A[e]	500 MHz
25GBASE-T	25000 Mbit/s	4	6.25	1000 MHz	Cat 8 (30 m)	1600/2000 MHz
40GBASE-T	40000 Mbit/s	4	6.25	1600 MHz	Cat 8 (30 m)	1600/2000 MHz

Hub Ethernet

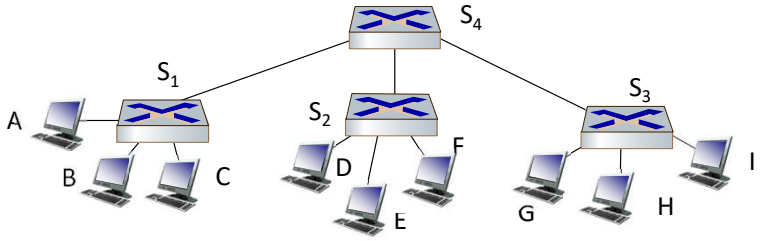

Bridge Ethernet

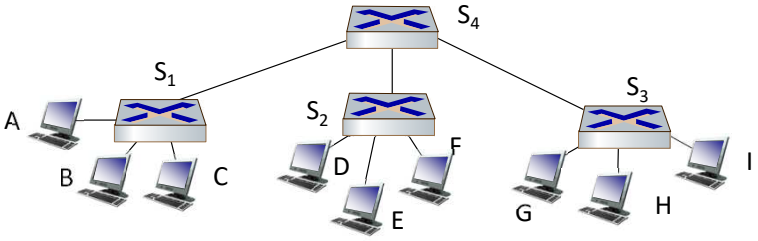

Bridge

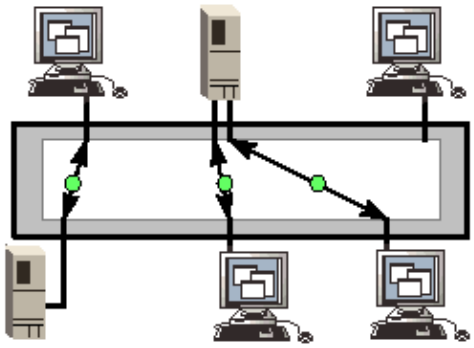

switch# **show mac address-table**

VLAN	MAC Address	Type	Port
10	0000.000b.2345	Dynamic	Gi0/1
11	0000.000a.a134	Dynamic	Gi0/2
12	0000.0027.4434	Dynamic	Gi0/3
13	0000.2340.5678	Dynamic	Gi0/4
14	0000.1234.0100	Dynamic	Gi0/5

Bridge

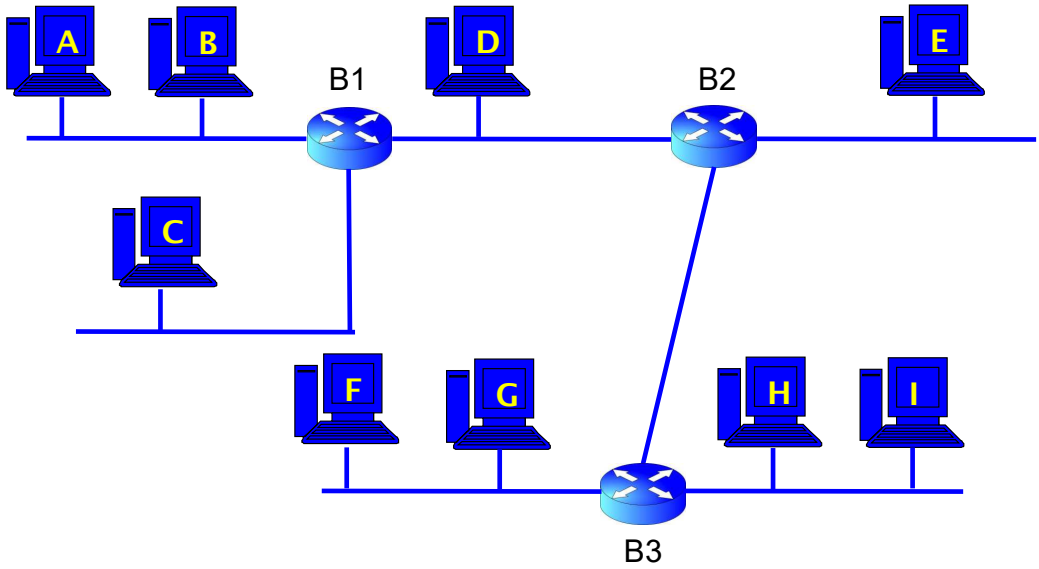

Bridge

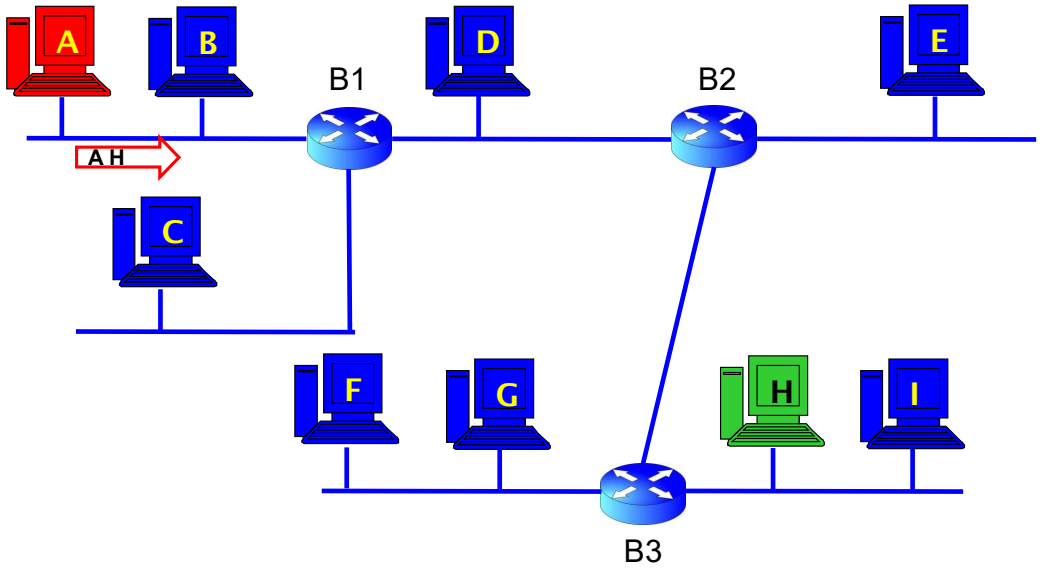

Bridge

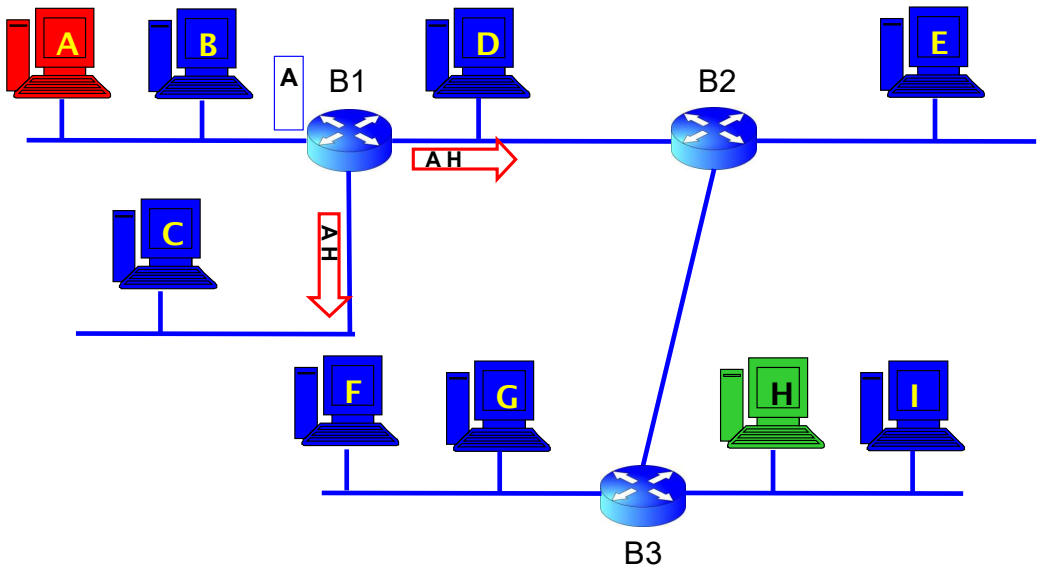

Bridge

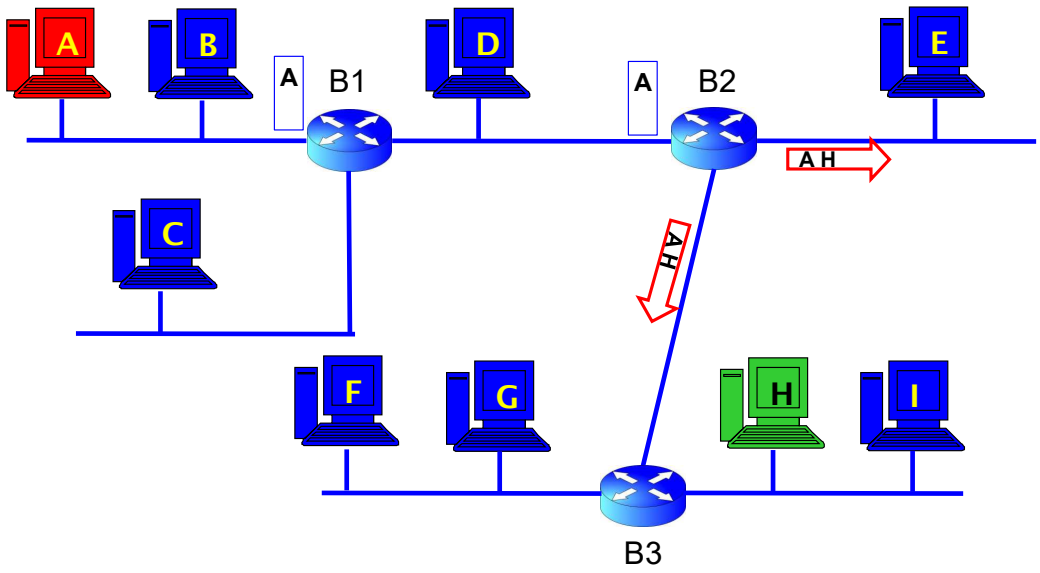

Bridge

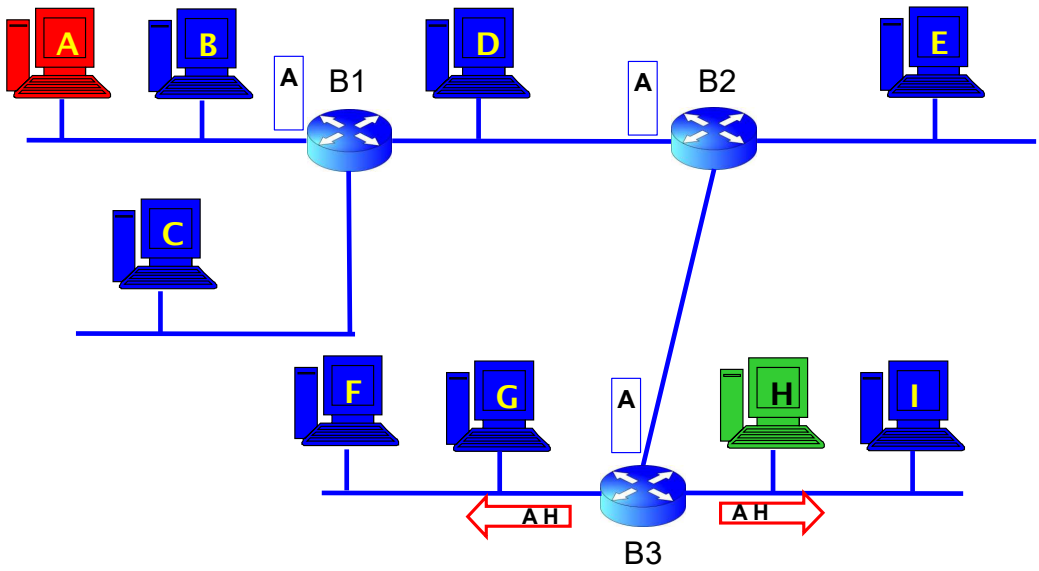

Bridge

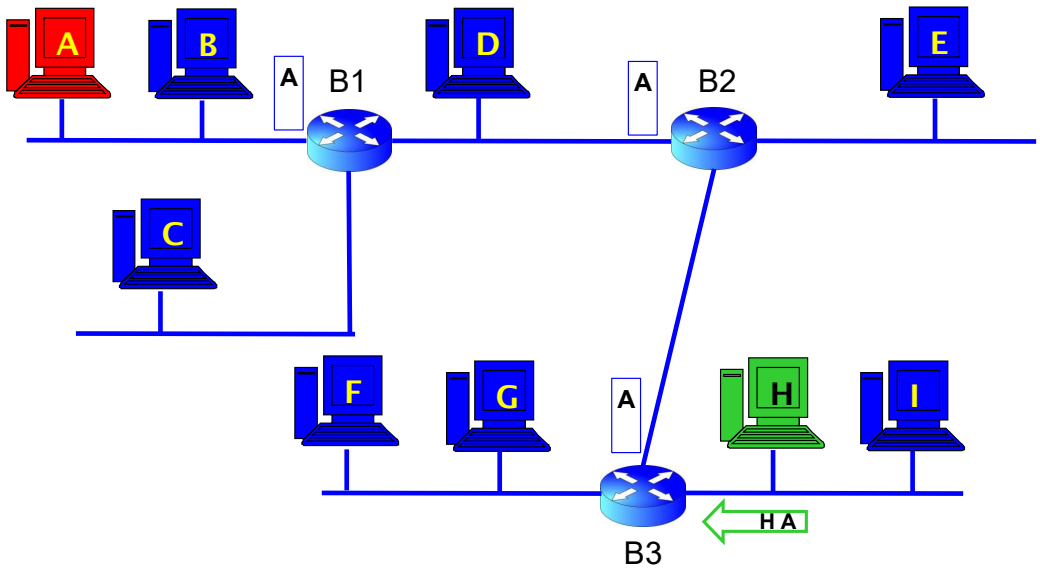

Bridge

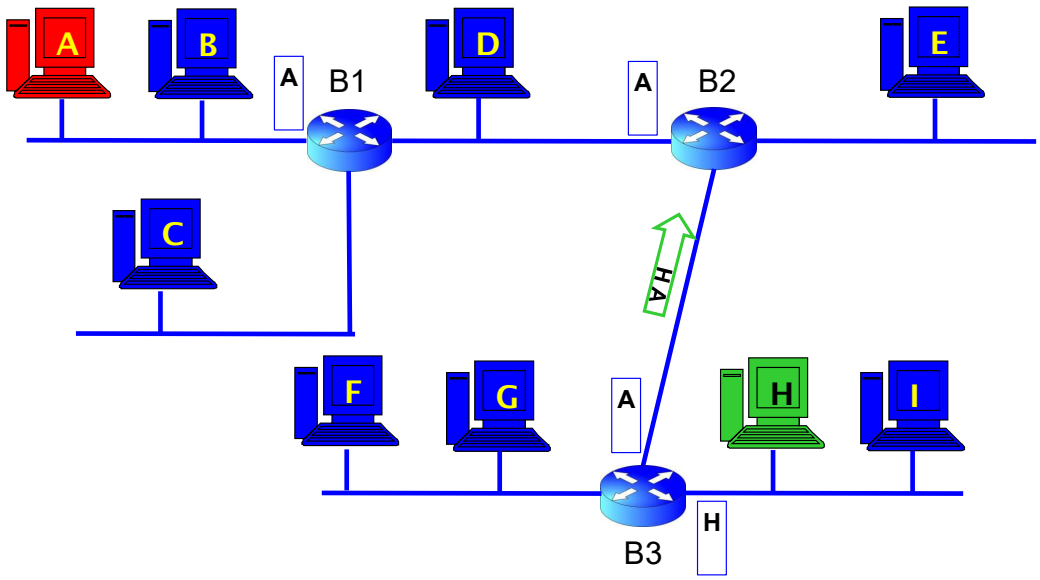

Bridge

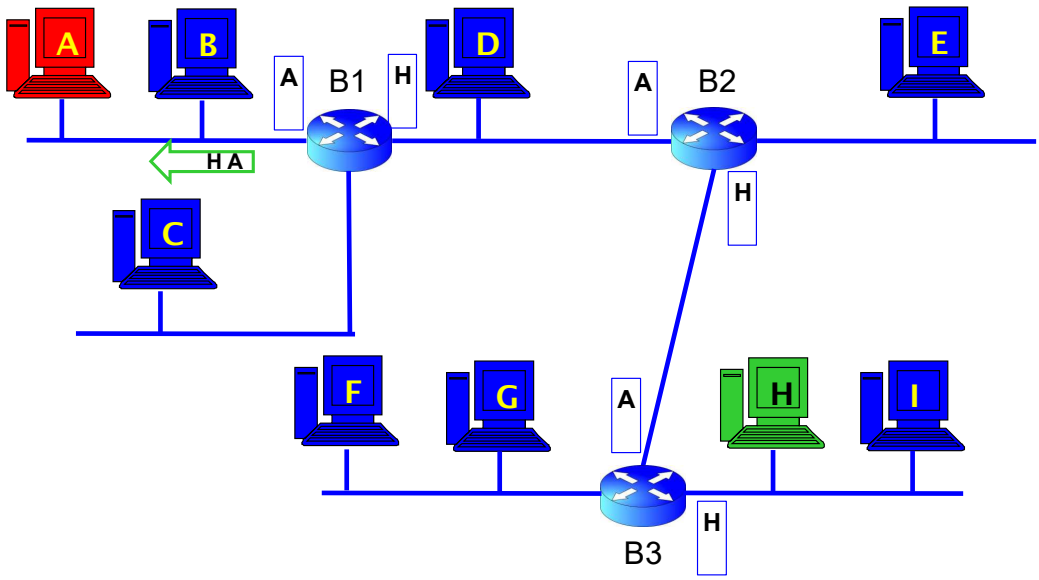

Bridge

switch# **show mac address-table**

VLAN	MAC Address	Type	Port
10	0000.000b.2345	Dynamic	Gi0/1
11	0000.000a.a134	Dynamic	Gi0/2
12	0000.0027.4434	Dynamic	Gi0/3
13	0000.2340.5678	Dynamic	Gi0/4
14	0000.1234.0100	Dynamic	Gi0/5

Bridge

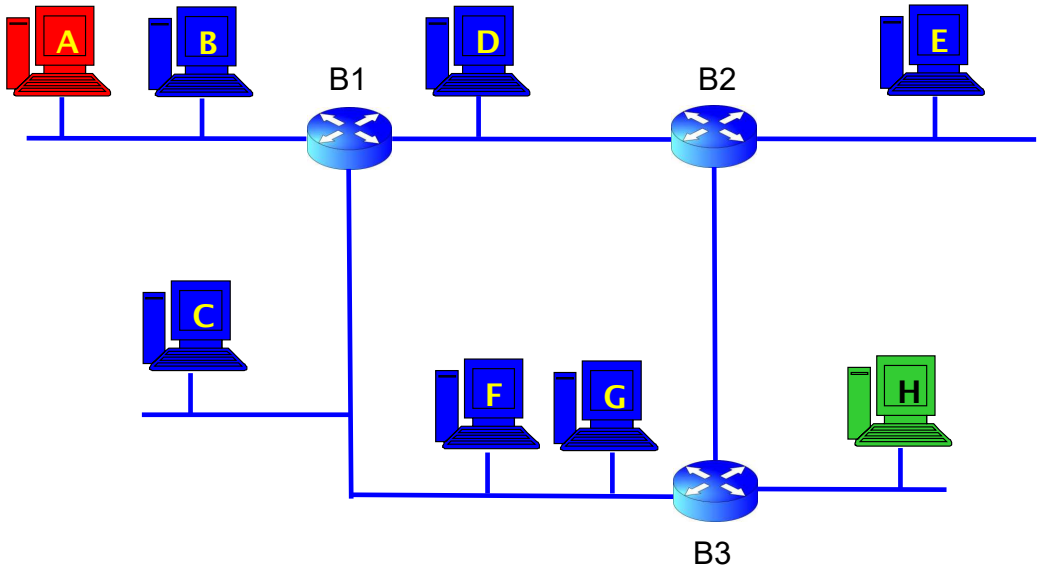

Bridge

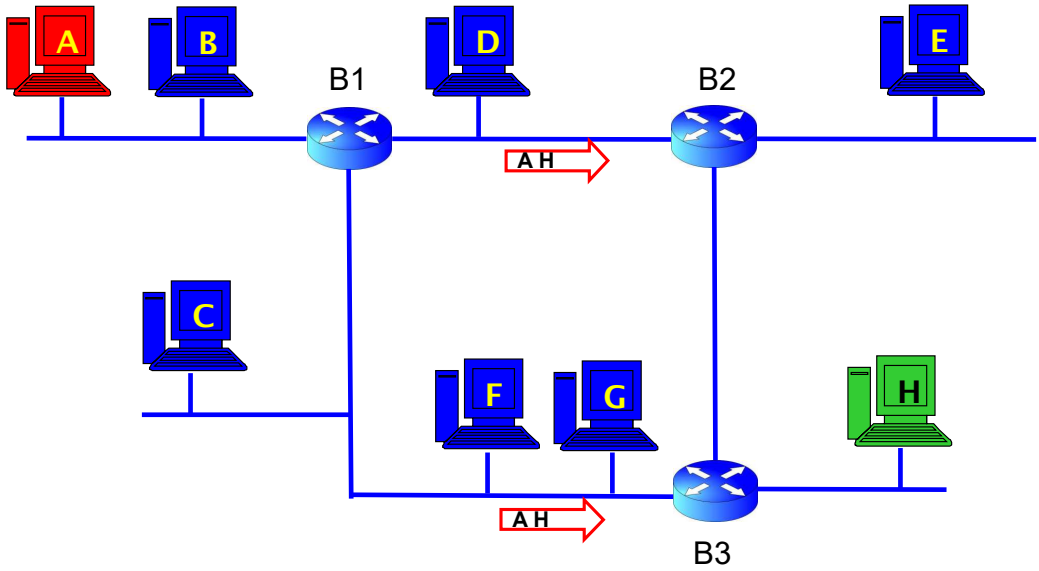

Bridge

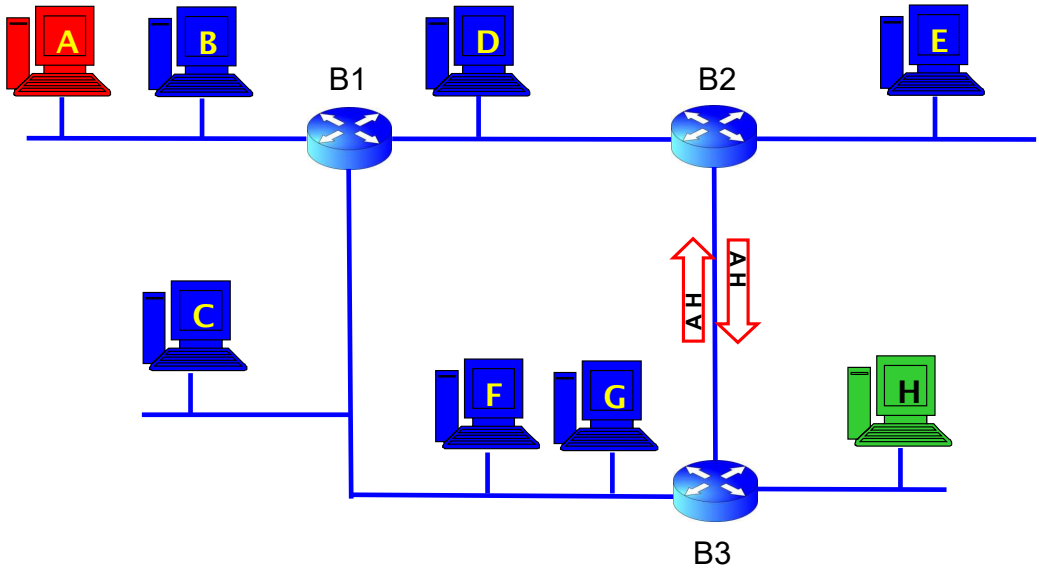

Spanning Tree Protocol (IEEE 802.1d)

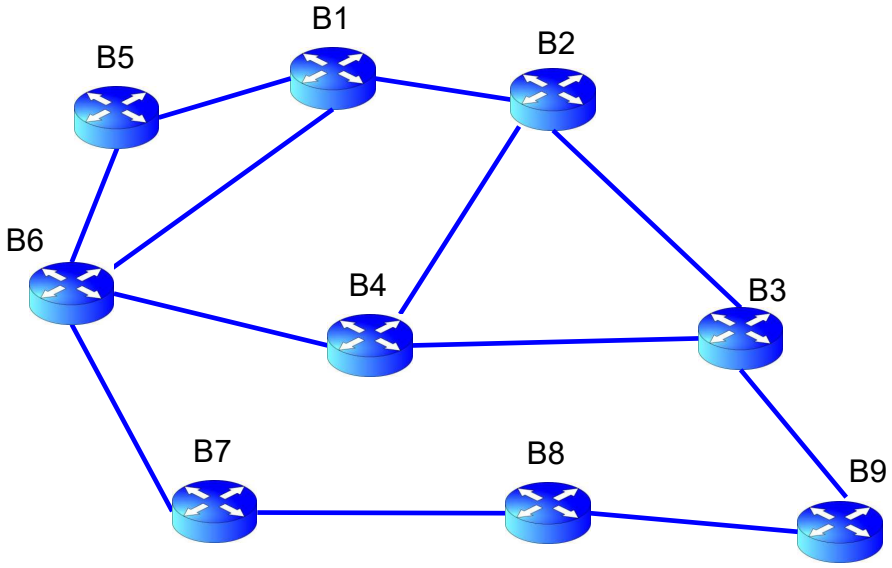

Spanning Tree Protocol (IEEE 802.1d)

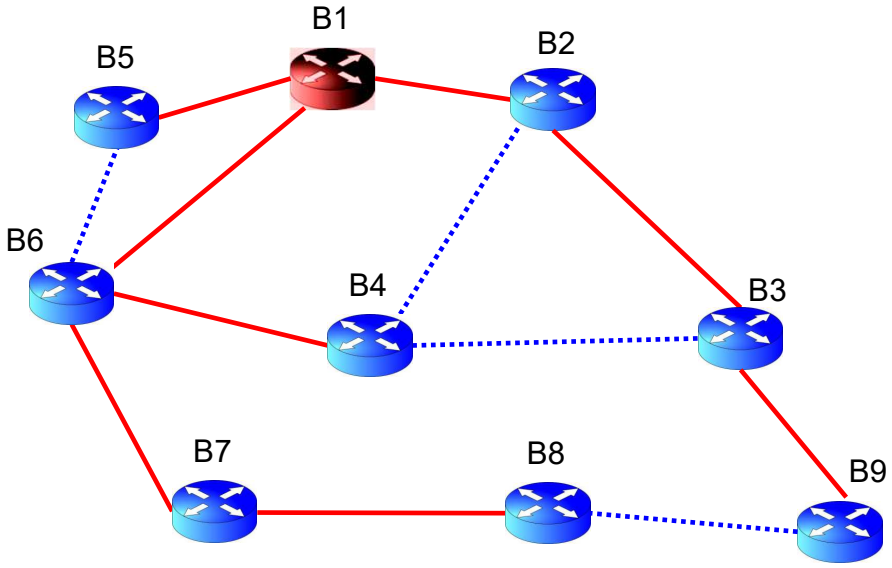

Repeaters, Hubs, Bridges, Switches

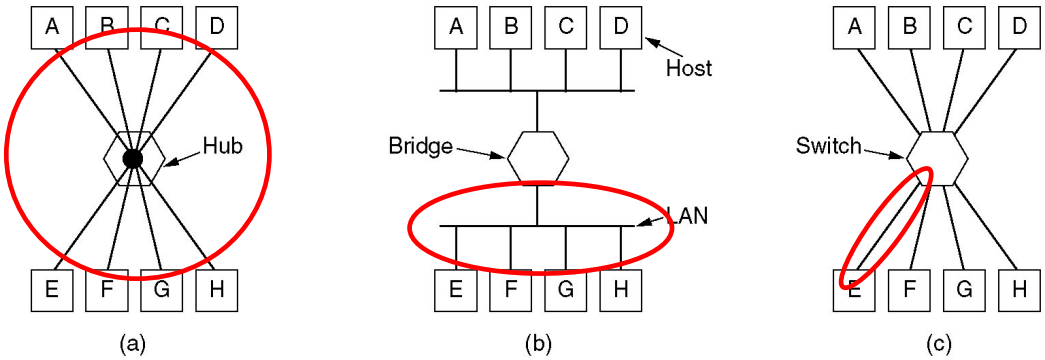

Collision Domains

VLAN

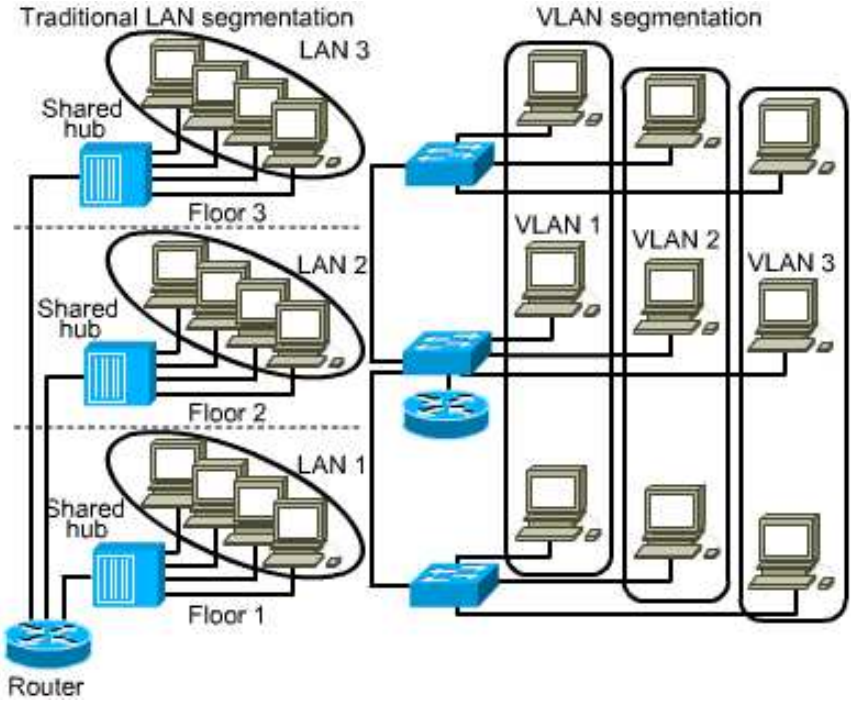
Traditional LAN segmentation
VLAN segmentation
LAN 3
Shared hub
Floor 3
LAN 2
Shared hub
Floor 2
LAN 1
Shared hub
Floor 1
Router
VLAN 1
VLAN 2
VLAN 3

VLAN

VLANs are separate logical LANs built into the same physical structure. Broadcast packets (layer 2) are confined within the VLAN

The connection between different VLANs must be made through layer 3 routing.

The IEEE 802.1Q standard defines specifications for VLANs.

VLAN

Purpose of VLANs:

- savings: reuse of pre-existing lines and equipment;
- flexibility: easy physical movement of users;
- performance increase: broadcast traffic is confined;
- security: Users of different VLANs do not see each other's data frames.

Port based VLAN (untagged)

The switch is logically partitioned into multiple parts, assigning individual ports to the various VLANs.

To create an untagged VLAN, a switch that supports the 802.1Q protocol is sufficient.

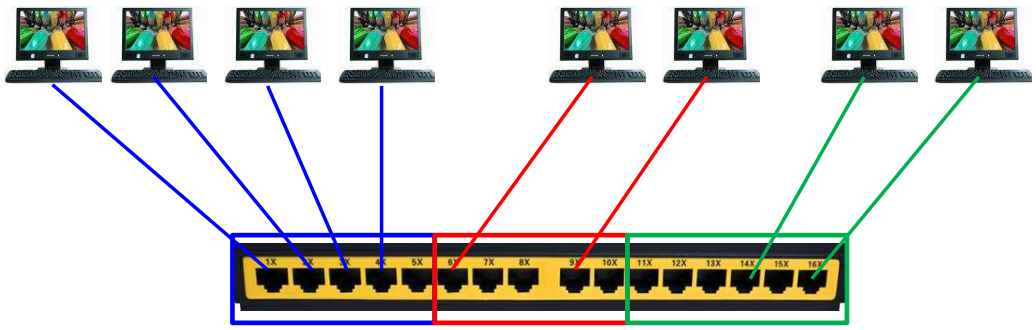

Untagged VLAN

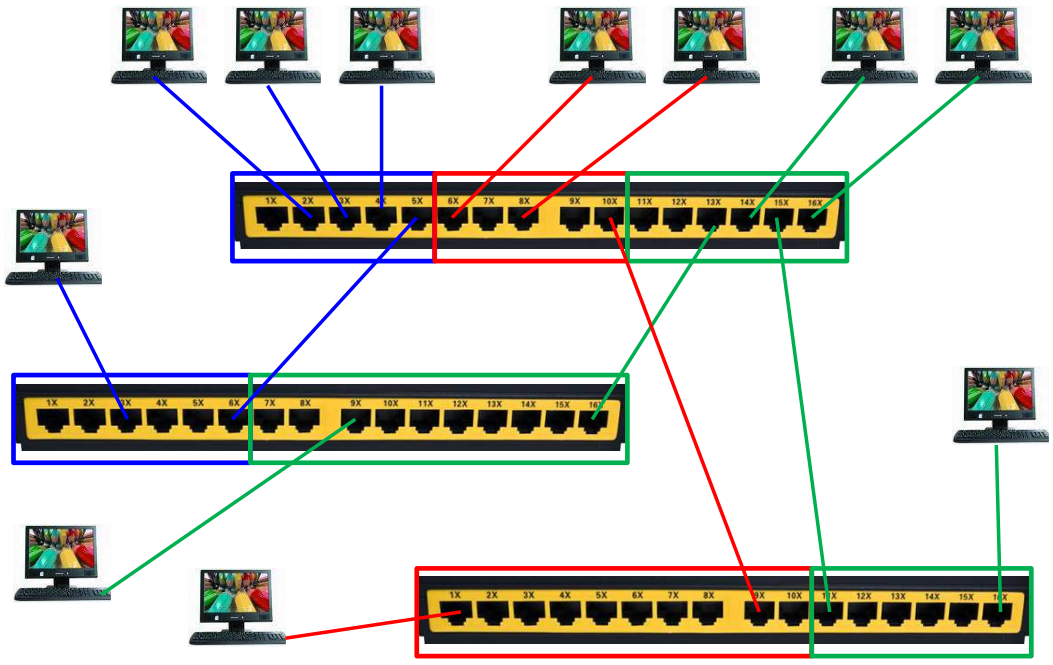

IEEE 802.1Q Standard

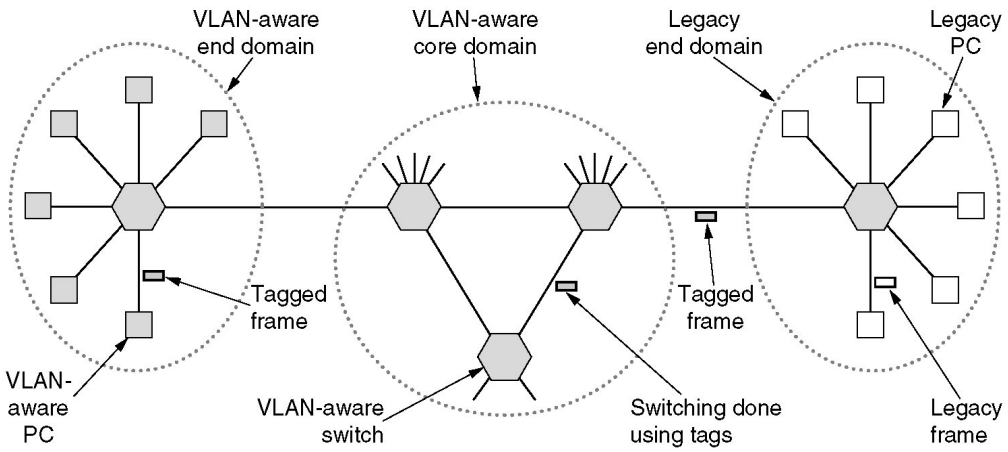

Tagged VLAN

The 802.1Q standard allows you to use the same physical links for different VLANs.

802.1Q inserts 4 bytes into the Ethernet frame, to be able to associate the frame with a VLAN.

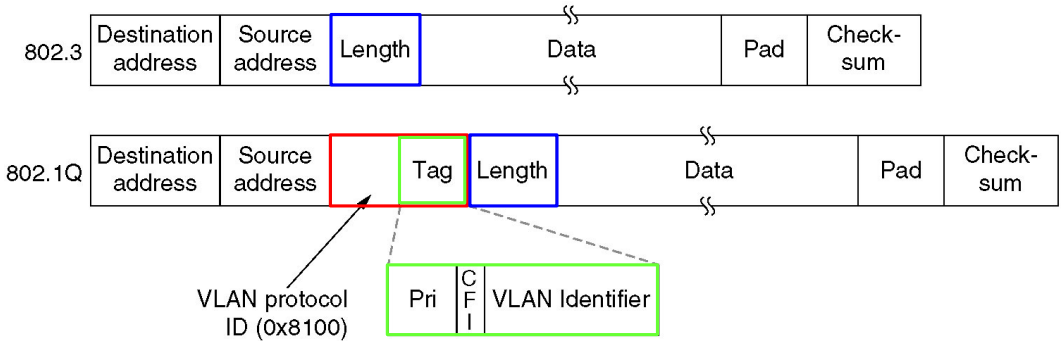

Tagged VLAN

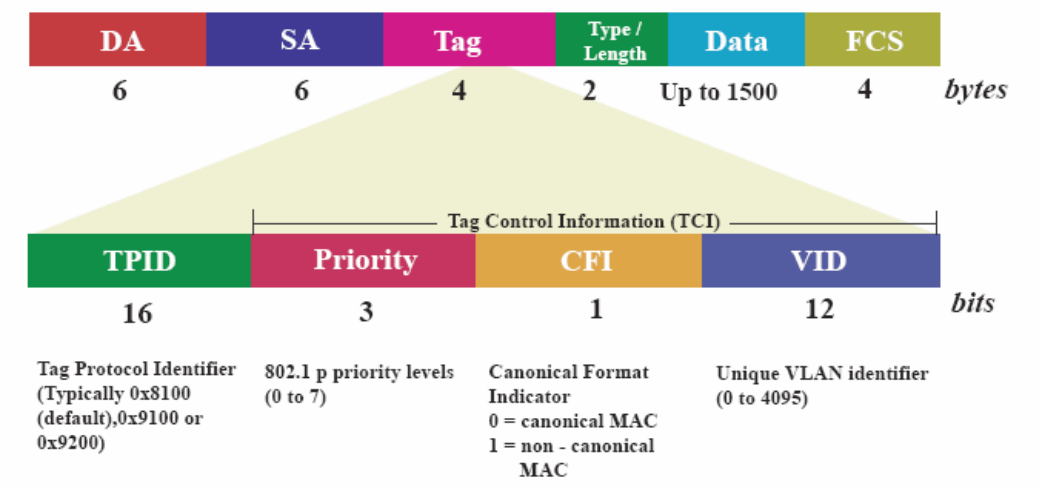
DA
SA
Tag
Type / Length
Data
FCS
6
6
4
2
Up to 1500
4
bytes
Tag Control Information (TCI)
TPID
Priority
CFI
VID
16
3
1
12
bits
Tag Protocol Identifier (Typically 0x8100 (default),0x9100 or 0x9200)
802.1 p priority levels (0 to 7)
Canonical Format Indicator
0 = canonical MAC
1 = non - canonical MAC
Unique VLAN identifier (0 to 4095)

Tagged VLAN

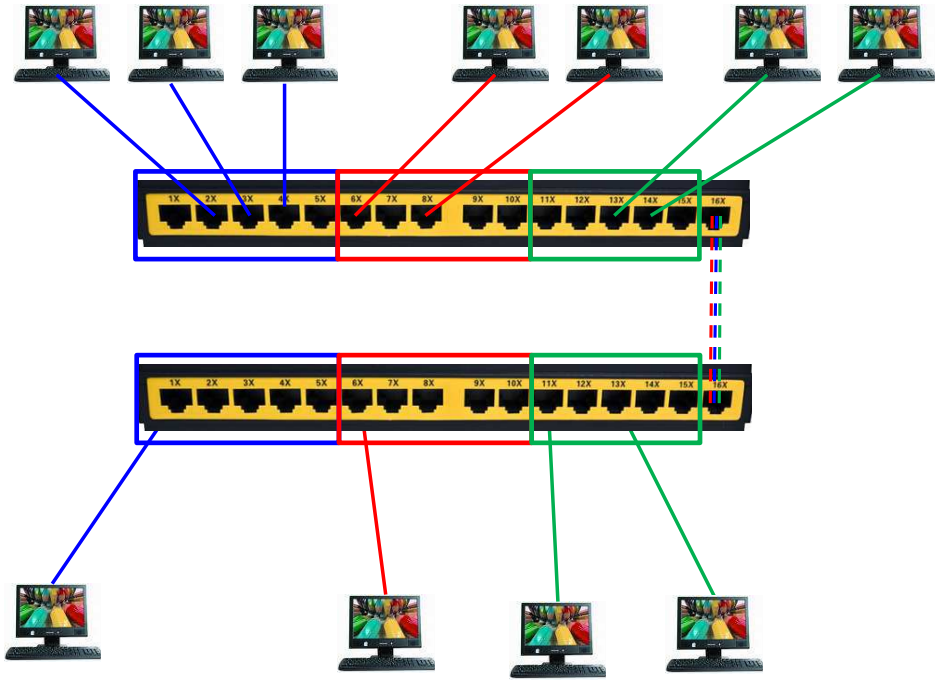
1X 2X 3X 4X 5X 6X 7X 8X 9X 10X 11X 12X 13X 14X 15X 16X
1X 2X 3X 4X 5X 6X 7X 8X 9X 10X 11X 12X 13X 14X 15X 16X

VLAN

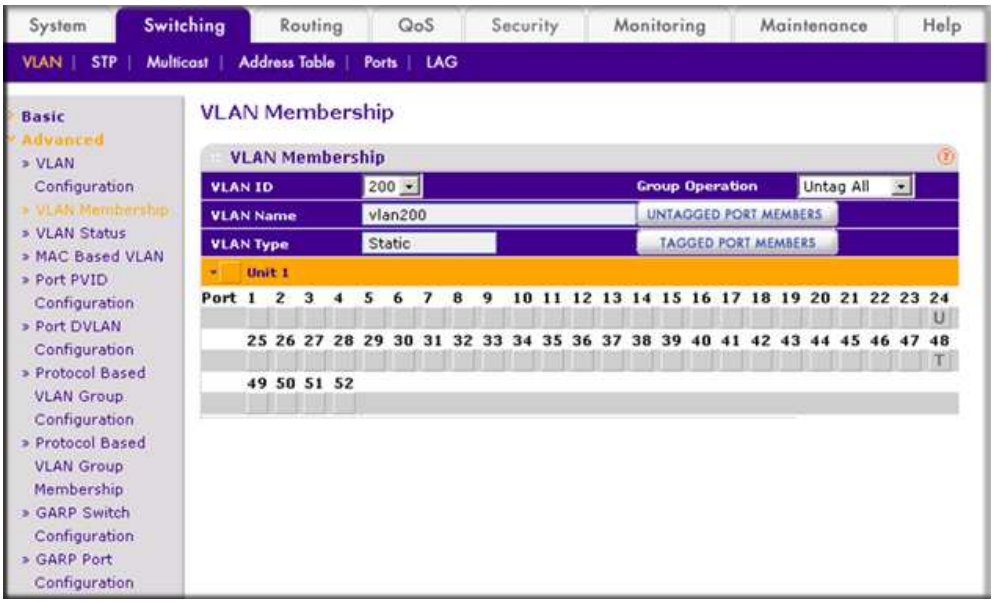
System
Switching
Routing
QoS
Security
Monitoring
Maintenance
Help
VLAN | STP | Multicast | Address Table | Ports | LAG
Basic
Advanced
VLAN Configuration
VLAN Membership
VLAN Status
MAC Based VLAN
Port PVID Configuration
Port DVLAN Configuration
Protocol Based VLAN Group Configuration
Protocol Based VLAN Group Membership
GARP Switch Configuration
GARP Port Configuration
VLAN Membership
VLAN Membership
VLAN ID
200
Group Operation
Untag All
VLAN Name
vlan200
UNTAGGED PORT MEMBERS
VLAN Type
Static
TAGGED PORT MEMBERS
Unit 1
Port 1 2 3 4 5 6 7 8 9 10 11 12 13 14 15 16 17 18 19 20 21 22 23 24
U
25 26 27 28 29 30 31 32 33 34 35 36 37 38 39 40 41 42 43 44 45 46 47 48
T
49 50 51 52

Redundancy

Let's consider a valid codeword: **101101**

We have **n** invalid codeword at distance 1

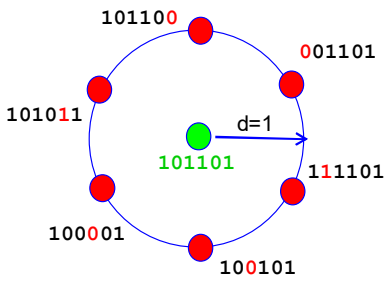

n+1

101101
001101
111101
100101
100001
101011
101100

n invalid codeword at d = 1

Redundancy

Let's consider a valid codeword: 101101

How many cw at d=2 are there?

101101
011101
000101
001001
001111
001100 } n-1
110101
111001
111111
111100 } n-2
100001
100111
100100 } n-3
100011
100000
101010 } 1

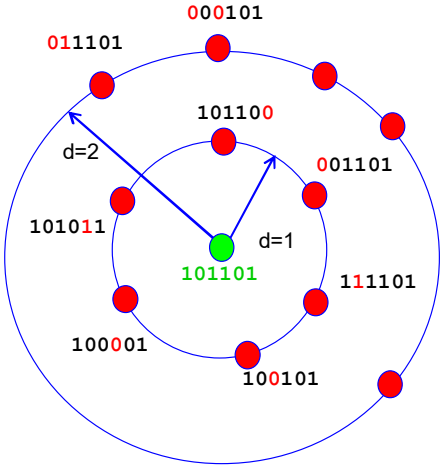

Redundancy

Let's consider a valid codeword: `101101`

We have:

- `n` cw at **d=1**
- `(n-1)+(n-2)+(n-3)+ … +1` cw at **d=2**

The total number of cw at d<=2 is:

$$1 + n + \frac{n(n-1)}{2}$$

So when `d=5`:

$$\left(1 + n + \frac{n(n-1)}{2}\right) 2^m \leq 2^n$$

Redundancy

$$\left(\mathbf{1} + \boldsymbol{n} + \frac{\boldsymbol{n}(\boldsymbol{n}-\mathbf{1})}{\mathbf{2}}\right)\mathbf{2}^{\boldsymbol{m}} \leq \mathbf{2}^{\boldsymbol{n}}$$

$$\left(\frac{\mathbf{2} + \mathbf{2}\boldsymbol{n} + \boldsymbol{n}^{\mathbf{2}} - \boldsymbol{n}}{\mathbf{2}}\right)\mathbf{2}^{\boldsymbol{m}} \leq \mathbf{2}^{\boldsymbol{n}}$$

$$(\mathbf{2} + \boldsymbol{n} + \boldsymbol{n}^{2})\mathbf{2}^{\boldsymbol{m}} \leq \mathbf{2}^{\boldsymbol{n}+\mathbf{1}}$$

$$(\mathbf{2} + \boldsymbol{m} + \boldsymbol{r} + \boldsymbol{m}^{\mathbf{2}} + \boldsymbol{r}^{\mathbf{2}} + \mathbf{2}\boldsymbol{m}\boldsymbol{r}) \leq \mathbf{2}^{\boldsymbol{r}+\mathbf{1}}$$

$$m^2 + m(2r+1) + r^2 + r \leq 2^{r+1}$$